City Research Online

City St George's, University of London

Citation: Comincini, S.E. (1994). Design of a flexible manufacturing cell/system, optimizing for quality. (Unpublished Doctoral thesis, City University London)

This is the accepted version of the paper.

This version of the publication may differ from the final published version. To cite this item please consult the publisher's version.

Permanent repository link: https://openaccess.city.ac.uk/id/eprint/7426/

Copyright and Reuse: Copyright and Moral Rights remain with the author(s) and/or copyright holders. Copies of full items can be used for personal research or study, educational, or not-for-profit purposes without prior permission or charge, unless otherwise indicated, provided that the authors, title and full bibliographic details are credited, a hyperlink and/or URL is given for the original metadata page and the content is not changed in any way. For full details of reuse please refer to City Research Online policy.

City Research Online: http://openaccess.city.ac.uk/ publications@citystgeorges.ac.uk

BEST COPY

AVAILABLE

Variable print quality

DESIGN OF A FLEXIBLE MANUFACTURING CELL/SYSTEM,OPTIMIZING FOR QUALITY

A THESIS SUBMITTED FOR THE AWARD OF DOCTOR OF PHILOSOPHY IN THE SCHOOL OF ENGINEERING , CITY UNIVERSITY, LONDON .

BY

SERGIO E. COMINCINI

DEPARTMENT OF MECHANICAL ENGINEERING AND AERONAUTICS

CITY UNIVERSITY

SCHOOL OF ENGINEERING

LONDON EC1VOHB

SUBMITTED : MARCH 1994

LIST OF CONTENTS

CHAPTER	TITLE	PAGE
	List of contents	I
	List of sketches	V
	List of tables	VII
	List of charts	VIII
	List of reproduced pictures	X
	Acknowledgments	XI
	Declaration	XII
	Summary	XIII
1	General introduction	
	1.1 Introduction	1
	1.2 The need for this study	5
	1.3 The objectives of this study	7
	PART ONE	
	TRADITIONAL DESIGN	
2	General Specifications	
	2.1 Conventional project definitions	12
	2.2 Basic lay-out of FMC	15
	2.3 Basic designs	16
	2.3.1 Machining Centre	16
	2,3.2 Linear axis	17

CHAPTER PAGE

2.3.3 Rotary table 19

2.3.4 Spindle headstock 20

2.3.5 Tool-changer magazine 21

2.3.6 Tool-changer system 23

2.3.7 Frontal twin pallet exchanger 25

2.4 FMC operations 27

2.5 Technical data 30

2.6 Structures 34

3 Design Approach

3.1 Conventional design approach 37

3.2 Other elements of the system 39

3.3 Mission assignment 41

3.4 Mission assignment resume 52

4 Detailed Specifications

4.1 Design development guidelines 54

4.2 Project's musts 62

PART TWO

DESIGN FUNCTION DEPLOYMENT

CHAPTER PAGE

5 Existing DFD methodology

5.1 State of the art software 67

5.2 Design Function Deployment " DFD " 68

5.3 Five common stages 76

5.4 Design function deployment charts 84

5.5 Conclusions on existing " DFD " 98

PART THREE

APPLICATION OF " DFD "

6 Analysis of a " FLEXIBLE MANUFACTURING CELL

6.1 Introduction 103

6.2 List of " DFD " charts 104

6.3 Evaluation of the charts 106

6.4 Correlation chain 106

6.5 Example of Correlation Chain 109

PART FOUR

CONCLUSIONS

7 SUMMARY DISCUSSION OF RESULTS ON FMC

7.1 Introduction 113

7.2 The scenario 113

7.3 Summary of the objectives 115

7.4 Design/Make or Buy/Cost Control/ Result 116

7.5 Project management 118

CHAPTER PAGE

8 SUMMARY DISCUSSION OF RESULTS ON USE OF " DFD "

8.1 Charts preparation 120

8.2 Charts compilation 120

8.3 Design Function Deployment 121

9 SUMMARY CONCLUSIONS 123

10 RECOMMENDATIONS FOR FURTHER WORK 125

REFERENCES 127

APPENDIX I. Tree structure of the charts 129

APPENDIX II Commentary on the DFD charts 132

APPENDIX III Correlation chain within an FMS 136

APPENDIX IV FMC/FMS Engineering sketches 141

ENCLOSED

Sketches

Reproduced Pictures

DFD charts back pocket

LIST OF SKETCHES

SKETCH N.001 BASIC LAY-OUT FLEXIBLE MANUFACTURING CELL

SKETCH N.002 MACHINING CENTRE LAY-OUT

SKETCH N.003 DIAGRAM OF SPINDLE MOTOR OUT-PUT

SKETCH N.004 " X " AXIS LONGITUDINAL SECTION

SKETCH N.005 " X " AXIS TOP VIEW

SKETCH N.006 " X - Y - Z " AXES BALL-SCREW SUPPORT

SKETCH N.007 " Z " AXIS TOP VIEW AND LONGITUDINAL SECTION

SKETCH N.008 " Z " AXIS CROSS SECTION

SKETCH N.009 " Y " AXIS SIDE VIEW (CARRIAGE AND SPINDLE HEADSTOCK)

SKETCH N.010 " Y " AXIS TOP VIEW (COLUMN AND SPINDLE HEADSTOCK)

SKETCH N.011 ROTARY TABLE CROSS SECTION

SKETCH N.012 CHAIN LINK AND TOOL-HOLDER SEAT CROSS SECTION

SKETCH N.013 SPINDLE HEADSTOCK CROSS SECTION

SKETCH N.014 TOOL CHANGER CLAMPING ARM

SKETCH N.015 TOOL-HOLDER ISO 50 AND DRAWBAR

SKETCH N.016 INDICATIVE FOUNDATION PLAN

SKETCH N.017 MACHINE TESTING SHEET N.A.S. TEST

SKETCH N.018 ALTERNATIVE TOOL MAGAZINES

SKETCH N.019 FMC BASIC CONFIGURATION

SKETCH N.020 FMC EXPANSION

SKETCH N.021 FMC FURTHER EXPANSION

LIST OF TABLES

		PAGE
TABLE N. 001	FMS WORLD DISTRIBUTION	3
TABLE N. 002	COMPARISON EAST / WEST , BASED ON 16 INDICATORS.	4
TABLE N. 003	RELATIONSHIPS AMONG FLEXIBILITY TYPES	10
TABLE N. 004	SOFTWARE MODULES CUSTOMER ORIENTED	51
TABLE N.005	LIST OF AVAILABLE TECHNIQUES CURRENTLY USED AND APPLICATION FIELD	72
TABLE N.006	QFD HOUSE OF QUALITY	75
TABLE N.007	STAGE 1 DFD CHART	85
TABLE N.008	STAGE 2 DFD CHART	90
TABLE N.009	STAGE 3 DFD CHART	93
TABLE N.010	STAGE 4 DFD CHART	96
TABLE N.011	STAGE 5 DFD CHART	97
TABLE N.012	DFD LOCATION IN STATE OF THE ART TECHNIQUES	99
TABLE N.013	EXAMPLE OF A CORRELATION CHAIN	108

LIST OF CHARTS

DESIGN FUNCTION DEPLOYEMENT ANALYSIS

FLEXIBLE MANUFACTURING CELL :-

CHART N.00 TOP LEVEL

CHART N.01 DESIGN TO COST REQUIREMENTS

CHART N.02 DESIGN FOR MANUFACTURE REQUIREMENTS

MACHINING CENTRE :-

CHART N.03 DESIGN OF X-Y-Z STUCTURE

CHART N.04 DESIGN OF PALLET EXCHANGER

CHART N.05 DESIGN OF TOOL-CHANGER MAGAZINE

CHART N.06 DESIGN OF X-Y-Z AXIS

CHART N.07 DESIGN OF SPINDLE

CHART N.08 DESIGN OF ELECTRICAL CABINET

CHART N.09 DESIGN OF COOLANT CIRCUIT

SHUTTLE SYSTEM FOR PALLET TRANSPORTATION :-

CHART N.10 DESIGN OF SHUTTLE STRUCTURE

DESIGN OF STORAGE PALLET LINE

CHART N.11 DESIGN OF LOADING/UNLOADING STATION

CHART N.12 DESIGN OF SHUTTLE INTEGRATION IN THE FMC

LIST OF CHARTS

TOOL HANDLING SYSTEM :-

CHART N.13 DESIGN OF CARRIAGE AND TOOL CLAMPING ARM

CHART N.14 DESIGN OF MODULAR GANTRY GUIDE-WAYS

TOOL ROOM :-

CHART N.15 DESIGN OF TOOL-ROOM LAY-OUT DESIGN OF TOOL-ROOM INTEGRATION

LIST OF REPRODUCED PICTURES

PICTURE N.001 " X " AXIS DETAILS

PICTURE N.002 " Z " AXIS DETAILS

PICTURE N.003 " Z - Y " STRUCTURES (REAR VIEW)

PICTURE N.004 " Y " AXIS DETAILS

PICTURE N.005 SPINDLE INDEX CONTROL AND DETAILS

PICTURE N.006 SPINDLE HEADSTOCK

ACKNOWLEDGMENTS

The writer wishes to thank all those who have given support, advice and guidance or lent their skills to facilitate the presentation of this work.

The work would not have commenced if it had not been for the interest of Professor Alan Jebb, and I would like to thank him for this interest and for his support.

I also wish to thank Professor Massimo Granchi of Pisa University (Istituto di Tecnologia) and Dott.Ing. Antonio Biondi (Industrial Consultant), for their continued support of this research project and their invaluable comments and guidance during the course of the study .

The work presented could not have been carried out without the involvement and the direction of the Engineering Design Centre of the Department of Mechanical and Aeronautics at The City University. Here I wish to thank the Director, Professor Alan Jebb, and my supervisor Dr Robert Edney.

The author especially wishes to thank his father in-law Mr Peter Wooding for his encouragement and help.

DECLARATION

I grant powers of discretion to the University Librarian to allow this thesis to be copied in whole or in part whitout further reference to me. This permission covers only single copies made for study purposes,subject to normal conditions of acknowledgments.

SUMMARY

The research presented in this thesis is concerned with the Design of a FLEXIBLE MANUFACTURING CELL open to further expansion into FLEXIBLE MANUFACTURING SYSTEM.
The work carried out includes practical and theoretical studies designed to meet the following objectives :-

PART ONE:- Presents the traditional design method used for the development of an FMC.

PART TWO:- Presents an introduction to the formal " DESIGN FUNCTION DEPLOYMENT " , currently discussed at the Engineering Design Centre at the City University

PART THREE:- Re-works the FMC design problem using the " DFD " methodology as currently exists.
Presents the use of the " DFD " methodology with some additional features correlating modifications to costs.

PART FOUR:- Presents the general conclusions about the FMC and its flexibility , and compares the design problem with and without DFD.
Enhancements to the DFD methodologies are proposed.
Where practicable, correlation between the results obtained from field experience and theoretical studies are attempted.
The author intends the contents of this thesis to add to the existing knowledge of global design process and enable the identification of specific areas of work which should be pursued for further studies.

CHAPTER 1

GENERAL INTRODUCTION

1.1 INTRODUCTION

In 1946 Mr D.S.Harder , manager at FORD , used for the first time the word AUTOMATION . It was used to describe the automatic transfer of an engine block on the production line. In 1952 Diebold [1] wrote the first book on the subject. The title was " Automation " and examined the fundamental differences between mechanical devices or machines and automated machines equipped with feed-back devices.

This new generation of machineries was immediately considered a great threat to employment. As an example in 1955 the automated manufacturing of an engine block was reduced to 14 minutes,a few years before the machining time was about 24 hours [2].

In this first phase of the development,the automation was implemented on stand-alone machines using NC and then CNC . The second phase saw the connection of some machines with the use of DNC .

Many companies made the first step into FMC or FMS with various degrees of success,many of them are now talking about CIM.

On account of the above , System Designers are now working on a new generation of Machine Tools.

New manufacturing technologies backed up by improved electronic hardware and software are supporting this new generation of machine tools and are improving system performance. Hard material (metal compounds) could machine metal at much higher speeds than currently used. The limitation is in the mechanical stiffness of the machines themselves.

Fast evolution of CNC , motors and drives have compelled manufacturers to improve the mechanical performance of machines and at the same time computers used as Cell Controllers have addressed and/or conditioned this development.

In table N. 001 we can examine the world distribution of FMS [2] .

In table N. 002 we can examine a comparison between East and West on the base of some significant indicators.

COUNTRY	NUMBER of FMS installed	SHARE %
1 Austria	6	0.8
2 Belgium	6	0.8
3 Canada	3	0.4
4 Finland	12	1.5
5 France	67	8.4
6 Federal Republic of Germany	74	9.3
7 Ireland	1	0.1
8 Israel	1	0.1
9 Italy	37	4.7
10 Japan	167	20.9
11 Netherlands	8	1.0
12 Norway	1	0.1
13 Republic of Korea	2	0.3
14 Spain	2	0.3
15 Sweden	36	4.5
16 Switzerland	6	0.8
17 Taiwan,province of China	5	0.6
18 United Kingdom	93	11.6
19 United States of America	137	17.1
Total Western Countries	664	83.1
20 Bulgaria	15	1.9
21 Czechoslovakia	23	2.9
22 German Democratic Republic	28	3.5
23 Hungary	7	0.9
24 Poland	5	0.6
25 Rumania	1	0.1
26 USSR	56	7.0
Total Eastern Countries	135	16.9
TOTAL	799	100.0

TABLE N.001 : FMS WORLD DISTRIBUTION

Indicators	East		West	
	N. of cases	Average	N. of cases	Average
1 Number of machining centres (MC)	71	5.3	441	4.6
2 Total number of NC-machines (NCMT)	116	8.5	576	7.2
3 Number of robots (ROB)	39	5.0	170	6.4
4 Technical complexity (TC)*	120	4.9	595	4.6
5 Operations rate (OPR), shifts	66	2.4	207	2.6
6 Number of un-manned shift (UNM)	13	0.9	112	1.0
7 Number of product variants (PV)	87	348.0	380	157.0
8 Average batch size (BS)	66	354.0	178	170.0
9 Investments (INV) mill US $	30	4.2	263	5.9
10 Pay-back time (PBT) years	29	4.8	61	3.5
11 In-process time (IPT)	31	3.6	44	7.0
12 Work-in-progress (WIP)	17	3.3	54	3.4
13 Personnel (PER)	60	2.5	111	4.5
14 Unit cost (UCR) increase by a factor of :	14	1.6	48	1.7
15 Productivity (PROD)	44	2.8	34	3.3
16 Capability utilization (CAP)	20	1.8	59	1.9

* TC=0.7 MC + 0.35 (NCMT-MC) + 0.3 ROB + 0.3 TRT , where TRT=1 or 2 ;
1 - simple, and 2 - sophisticated transportation system.

TABLE N.002 : Comparison EAST / WEST,based on 16 indicators

1.2 THE NEED FOR THIS STUDY

Data and previous experience was gained from Machine Tools industries in Europe and in USA .

Deep discrepancies between the manufacturing needs , the technology level required , its integration in the Company culture and in the way this mix of requirements is expressed to the suppliers ,is stimulating a more scientific approach to the problem suggesting the subject for the research .

Manufacturing parts using FMS or FMC technology , requires a great commitment of all the Company's departments involved.

At the forefront is obviously the R&D, which ,having received some indications from the Marketing & Sales Depts. , knowing the final requirements , try to identify the best solutions.

Some limits or constraints must be accounted for .

Many times the design of Machine Tools , their automation , their management and their flexibility are becoming crucial factors.

In some cases products and their parts are subject to rapid changes , these causing a lot of inconvenience from the technical and economical point of view.

Sometimes the feeling that the problem belongs to somebody else prevails , but in reality the problem is only moved

from one department to another .

Society and the industrial world are now facing new challenges not only from the technical point of view .

New social policies are now urgently researched for an even distribution of resources and incomes . These are new factors that the designers have to account for .

Japanese companies have developed " Quality Function Deployment ",described by AKAO [3] , as a design tool which focuses on the requirements of the customers.

This is becoming established in the automobile industry and offers significant advantages in reduced product lead times. PUGH et al.[4] have enhanced QFD to include original design concepts.

Jebb et al.[5] are developing QFD into DFD, Design Function Deployment,a new design methodology.

There is a need to improuve existing design techinques used in the machine tool industry,and existing DFD models of the design process need to be tested against practical problems.

1.3 THE OBJECTIVES OF THIS STUDY

The principle objectives of this study are:-

1) To design the concept of a FLEXIBLE MANUFACTURING CELL , which can successfully answer the requirements of the SUBCONTRACTORS INDUSTRY and/or MEDIUM SIZED COMPANIES , open to further expansion into FLEXIBLE MANUFACTURING SYSTEM.

2) Meet the expectations of FLEXIBILITY with reference to :-

A) Machine flexibility , as the capacity of the machine to manufacture different parts with limited, or nil, preparation times.

B) Process flexibility , as the capacity to work in a sequence different parts, without requiring batches.

C) Product flexibility , as the capacity to add new parts to the production mix without requiring long preparation times.

D) Routing flexibility , as the capacity to operate in the planned production flow even in the event of default of other machines involved in the production flow.

E) Volume flexibility , as the capacity to operate with reduced contribution margin , in the event of reduced production. This capacity is measurable comparing the production cost against the production output.

F) Expansion flexibility , as the capacity to expand from a Cell lay-out into a FMS lay-out.

G) Operation flexibility , as the capacity to change the manufacturing sequence for each part

H) Production flexibility , as the result of all the above mentioned flexibility

See TABLE N. 003

3)The use of the DFD methodology has two

consequences :-

a) Improving the productivity of the FMC/FMS designers

b) Enhancing the productivity of the FMC itself

To use the DFD methodology , to investigate how a reviewed design , purposefully made for a SUB-CONTRACTOR Company can enhance productivity in several ways :-

A) Reduction of direct labour cost

B) Increase of productivity and production

C) Reduction of production batches philosophy

D) Reduction of change-over times from one type of production mix to another

E) Reduction of Work in Process , stock , financial costs

F) Improve quality on parts produced

G) Off-line programming of FMC

H) Maximum use of the FMC

I) Complete cost control on produced parts

4) To demonstrate that a FLEXIBLE MANUFACTURING CELL purposely designed for the SUB-CONTRACTORS can be of great interest for our Industrial future.

RELATIONSHIPS AMONG FLEXIBILITY TYPES

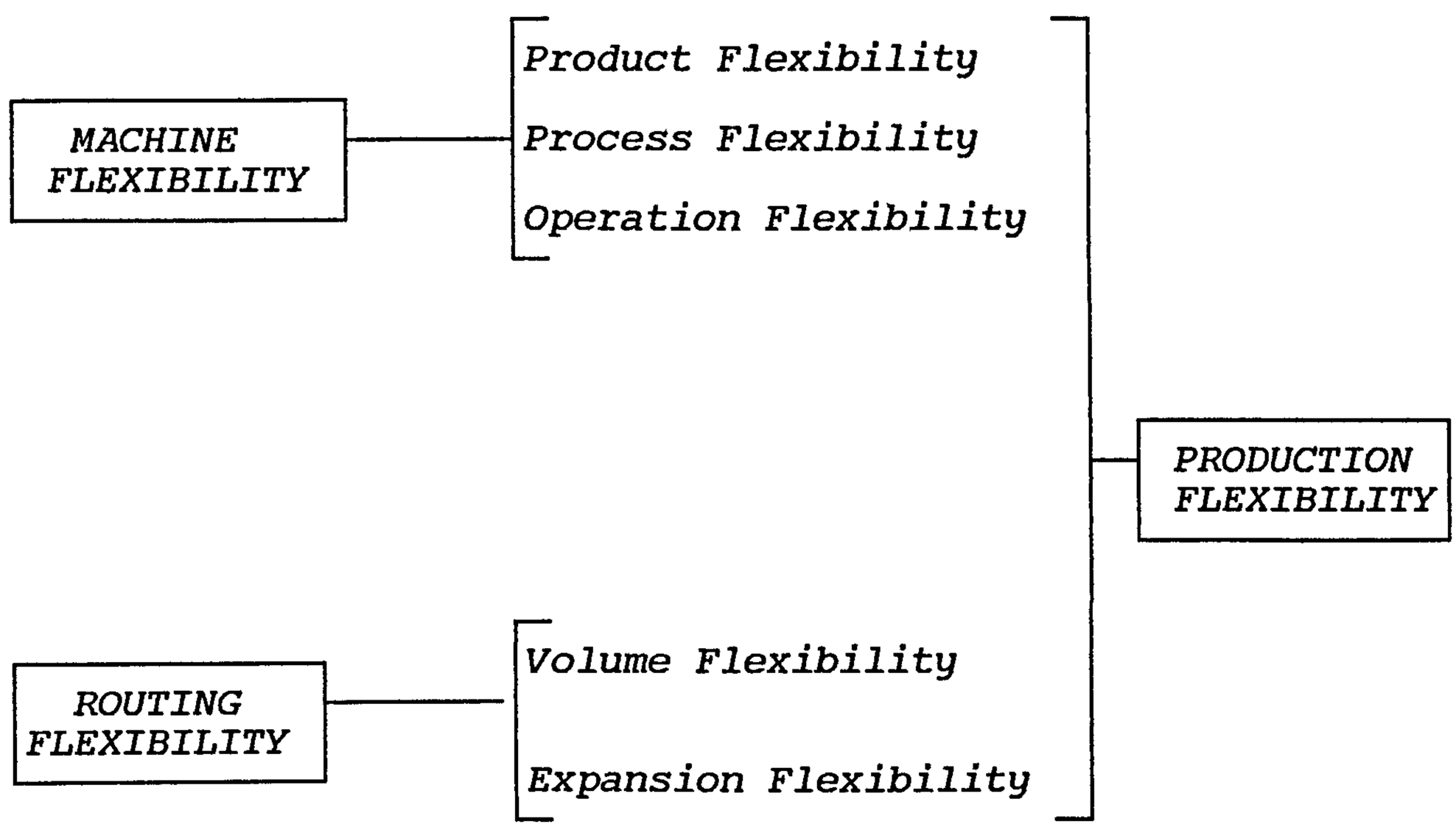

TABLE N.003 : Relationships Among Flexibility Types.

PART ONE

TRADITIONAL DESIGN

CHAPTER 2

GENERAL SPECIFICATIONS

2.1 CONVENTIONAL PROJECT DEFINITIONS

- Design a Flexible Manufacturing Cell of a medium size, suitable for manufacturing a wide range of parts commonly assigned to the sub-contractors by general industries and , in particular , Automotive and Aerospace manufacturers.

The main target of the project is to design an FMC which would completely answer the global needs of a subcontractor as per :-

1) Limited floor space and foundation requirements

2) Maximize machining time availability

3) In the event of a default of one machine , the system can be used in a degraded mode assuring production continuity.

4) The Cell Controller is not used to exclusively run the manufacturing process,but it is used for the complete management of the business achievement of the FLEXIBLE

MANUFACTURING CELL , being linked with the other department of the Company.

On account of this approach the Cell Controller will be used for :-

- *Production feasibility studies*
- *Production cost estimate*
- *Generation of commercial offers based on real and complete analysis of available parameters*
- *continuous costs control and on-line data base link for real time up-dating and comparison*
- *Generation of commercial invoices based on production and administrative requirements*
- *Logs and up-dates automatically all maintenance data and relevant costs from service and financial points of view*
- *Plans and allocates production schedule of the requested batches using the CAD/CAM package and a simulation software module that operates on continuously up-dated information on FMC performance and availability record*

5) *Low cost of spare parts and extended use of common and commercial components whenever possible , associated to easy maintenance operations*

6) *Reasonable investment , progressively expandable into FMS configuration if required.*

2.2 BASIC LAY-OUT of FLEXIBLE MANUFACTURING CELL

The cell will be composed of

- Tool-Room
- Pre-Setting Machine
- Tool handling system
- Machining centre n° 1
- Machining centre n° 2
- Shuttle system on vertical rail (modular)
- Pallets storage line (modular)
- Rotary loading station
- Cell system manager

see sketch n° 1

With the above mentioned elements it is possible to create a FLEXIBLE MANUFACTURING CELL with an high degree of flexibility, enhancing its performance by means of software packages that can interconnect the FMC with all the Company's functions.

2.3 BASIC DESIGNS

2.3.1 Machining centre

The first consideration to be made is relevant to the different machines structures currently used by the Machine Tool Manufacturers.

Considering our FMC for a size of 630 x 630 mm pallets, therefore a small /medium sized cell, besides rigidity precision and repeatability,one would consider the following key elements :-

A) Easy front access for the automated operation of pallet changing.

B) Easy chip evacuation , as the continuous manufacturing process generates a lot of chips mixed with coolant , it is important to make sure that their evacuation will be efficiently performed

C) Tool-changer magazine and swiveling arm to be mounted on an independent structure.

This design allows high precision finishing operations as the MC structure does not have to absorb any eventual vibration induced by the tool-changer, swiveling arm or in the FMC configuration by the tool-handling system

re-organizing the tools in the magazines.

For the above mentioned reasons the chosen design is a " T " section for the X and Z axes with moving column representing the Y axis.

2.3.2 Linear axis

Three linear axes constitutes the structure of the MC.

X axis = longitudinal ..... (carriage and rotary table)

Y axis = transversely ..... (moving column)

Z axis = vertical..... (headstock and spindle)

The axes are independent and their motion is controlled by a N.C. for positioning , simultaneous linear interpolation , circular interpolation in the plane , elicoidal interpolation in the plane and in the orthonogal axis.

The motion is obtained using A.C. motors equipped with an electrical brake activated by a line shut-down.

- Picture N. 001 illustrates X axis and Rotary Table
- Sketch N. 004 illustrates X axis longitudinal section
- Sketch N. 005 illustrates X axis Top view
- Sketch N. 006 illustrates X - Y - Z axes ball-screws support

- Picture N. 002 illustrates Z axis details :-
    - Ball-screw and pre-loaded nutshell
    - Ball-screw support
    - Limit micro-switch , rack and cam
    - Z axis optical mounting
- Sketch N.007 illustrates Z axis top view and longitudinal section
- Sketch N.008 illustrates Z axis cross section
- Picture N.003 illustrates Z - Y structures (rear view)
- Sketch N.009 illustrates side view Y axis carriage and spindle headstock
- Sketch N.010 illustrates Y axis top view of column and spindle headstock
- Picture N.004 illustrates Y axis column and details

The steel welded structures,thermally stabilized,are designed to use ready made guide-ways.
Guide-ways are bolted into position and welded for life with inserted liquid steel along the longitudinal groove.
Commercial guide-ways heat treated and precison ground , have a hardness of about 60 HRC , the carriages of X-Y-Z axes are each supported by a set of 12 preloaded roller cages.

The roller cages have the following functions :-

- support the carriage
- keep alignment during motion
- react to applied forces during machining operation

The precise positioning of each MC axis is obtained by means of an optical scale with reading precision of +/- 0.005 mm.

The optical scale is located along each axis,beside the ball-screw between the guide-ways.

Lubrication of the roller cages,guide-ways and ball-screws is performed by an independent power pack.

Particular care has to be taken in designing the guide-way covers to guarantee easy chip removal, helped by coolant jets distributed along the " X " and " Z " axes.

A basic rule that should never be ignored by designers is that flat surfaces ,pockets, etc. , should be avoided.

Chips and coolant are one of the most dangerous mixtures for the life of machine tools,and generally the cause of 10 % of the basic mechanical maintenance problems.

2.3.3 Rotary Table

This device, CNC controlled , is composed of a cast iron case

that houses a high precision gear motioned by an endless screw (transmission ratio 1/180) .
The screw is coupled directly to the A.C. motor equipped with an encoder (360,000 positions).
The use of a large diameter combined bearing for axial and radial load assures high rigidity and smooth running.
Clamping into position is done hydraulically.
The retaining pallet device is built in accordance with the ISO/TC39/SC3 n.181 " Modular units for machine tools".
Sketch N.011 illustrates a cross section of the Rotary table.

2.3.4 Spindle Headstock

Mounted on the guide-ways of the Y axis column , the headstock , a cast iron structure thermally stabilized is held into position by 12 roller bearing packages.
Balancing is obtained by means of an hydraulic cylinder in a close loop circuit with an oil accumulator.
This circuit allows a reverse motion of the axis with smoothness and precision.
The spindle cartridge in Ni-Cr mounted on 3+2 ball bearing assembly is coupled to a counter shaft that, by means of a poli-V belt connects with the spindle motor.
Sketch N.003 illustrates the spindle power out-put.
Sketch N.013 illustrates the headstock cross section.

In the rear are mounted two devices :-

- Spindle index control necessary in order to guarantee the correct spindle positioning for the tool changing operation. It is comprised of a magnetized element mounted on the spindle and a sensor mounted on the headstock.

Table N.028 illustrates the mounting instructions.

- Tool clamping device , is the retaining mechanism holding the tool-holder safely into the spindle nose during machining operations.

It is comprised of an hydraulic cylinder mounted at the rear of the spindle and proximity switches for the position control . The hollow rod allows the mounting of the rotary coolant distributor as shown in sketch N.012.

- Picture N.005 illustrates the spindle index control, the tool clamping device and other details.

- Picture N.006 illustrates the spindle headstock mounted into position on the Y axis column and other details.

2.3.5 Tool-changer magazine

The tool-changer magazine is an independent unit composed of a steel welded structure.

It is positioned beside the MC and therefore it will not add weight to the machine tool, nor transmit vibrations.

The chain links are lodging in each pin a tool-holder seat, ready to receive an ISO 50 tool-holder.

The structure can be configured in a way to receive a 6,500 mm chain holding 50 tool-holders or 13,000 mm chain (length) holding 100 tool-holders.

- *Sketch N.012 illustrates the chain link and a cross section of the tool-holder seat.*
- *Picture N.007 illustrates a 50 and a 100 positions tool-holder magazine.*

The pitch of the chain link , therefore the tool-holder seat, is 130 mm and it is possible to load adjacent tools with a maximum diameter of 125 mm . Special tools up to 315 mm diameter can be held in the magazine and be handled by the swiveling arm. As a consequence there is a loss of tool capacity because such a tool would also cover the adjacent seats.

During the motion the chain is held sideways by plastic material .

The driving wheel is coupled to a 90 degrees reduction gear-box motion by an A.C. motor equipped with an encoder, CNC controlled.

Each tool-holder seat , as shown in Sketch N.012 , retains

the tool-holder stud with a simple spring loaded clamping device.

In the tool changing position an hydraulic piston rod will push the 17,6 mm rod releasing the stud and therefore liberating the tool-holder for a tool changing operation.

2.3.6 Tool changer system

This system performs the tool changing operation moving the tool-holder/tool from the MC spindle to the magazine and viceversa .

It is comprised of four sub-assemblies :-

1) Hydraulic rotary unit .

Once the tool-holders have been extracted from the tool-holder magazine and the spindle nose , the hydraulic rotary unit swivels for 180 degrees ,carrying the complete tool changer mechanism described below.

2) Hydraulic carriage , moving along two precision ground columns carries the clamping sub-assembly.

3) Index mechanism in built in the carriage, it is comprised of a linear gear that engages a geared shaft connected to the clamping arm flange.

4) Clamping assembly composed of:-

- Double clamping arm , complete with cam operated locking system at each end. See Sketch N.013.

- Extractor cylinder and clamping arm flange,mounted on the hydraulic carriage.

The axes of the tool-holder magazine and the spindle of the MC are orthogonal.

The tool-change cycle is the following :-

1) Carriage moves from the stand still position towards the tool-holder magazine that has already positioned the required tool.

2) The clamping arm clamps the tool-holder/tool

3) The extractor cylinder moves along the tool-holder axis and fully extracts the tool-holder from its seat.

4) Carriage return to the stand still position.

5) Rotary unit swivels for 180 degrees.

6) Carriage moves from stand still position towards the the spindle nose untill it clamps the used tool, to be replaced.

7) The extractor cylinder moves along the spindle axis and fully extracts the used tool-holder/tool from its spindle seat.

8) The index mechanism moves rotating for 180 degrees the clamping arm,now carrying the worn and the new tool.

9) The extractor returns to the stand still position and places the new tool in the spindle seat, where

the stud of the new tool will be clamped .

10) Carriage moves back to the stand still position

11) Rotary unit swivels. back to the stand still position.

The tool-changer is now ready for the next operation.

2.3.7 Frontal twin pallet exchanger

The pallet exchange to /from the MC or the shuttle system is performed by this unit.

The pallet change operation takes place after completing the positioning of the carriage along the X axis and indexing the B axis (rotary table). The correct positions of the X and B axes are confirmed by electrical microswitches.

The steel welded structure of the unit is bolted and aligned to the X axis structure, at the same height as the rotary table, two set of guide-ways are positioned one beside each other driving the pallet during the exchange operation.

The driving mechanism comprises an hydraulic motor driving a reduction gearbox that motions a double chain ,is positioned at the centre of each guide-way.

This chain (ISO 16B-2 pitch 25,4 mm) inclined by 10 degrees in respect to the pallet bottom face engages, by means of a small diameter shaft mounted at the side of one link , the pallet therefore driving its motion along the guide ways.

At the end of the guide-ways stroke the pallet will have

reached position and the chain shaft will disengage the pallet by itself at the end of its stroke on the upper side (10 degrees inclination).

The chain motion and the pallet positions reached in/out the MC or the Shuttle system are confirmed by means of proximity switches.

2.4 FLEXIBLE MANUFACTURING CELL OPERATIONS :-

The system will work in this way :

The Cell Controller will import the drawing of the part under consideration by means of a diskette .

Using its CAD/CAM resident package it generates the analysis for the evaluation of the part machinability.

Analysis Output:

a) Necessary tool list compiled within the tools currently available in the FMC tool-room.List of tools known to the CAD/CAM package,necessary for the part manufacturing and evidenced list of special requirements (Special requirements are the finished parts geometries not obtainable using standard tools e.g. 37° chamfer).Most of this analysis is obtainable from software currently available.The Operator will have to supervise the special requirements.

b) Part program times for

- Machining operation
- Pallet loading/unloading operation
- Number of Tool changes and total time
- List of Tools to be made available on double,or more, basis to complete the requested batch
- Total travelling time of shuttles for pallet and tool

handling system

- Total FMC occupancy time for the completion of the requested batch
- List of coded tool bits used for the requested manufacturing given an assigned statistical life

c) Manufacturing Costs analysis for

- Occupancy cost related to the calculated crossing time of the requested batch
- Tool consumption cost as generated by CAM program based on statistical tool life and assignment
- Electrical power consumption as evaluated in CAD/CAM package (based on average stock removal and material specifications)
- Ancillary costs assigned per/hour for :-

  Coolant

  Supervision

  Loading/unloading operator

  Maintenance

d) Production allocation schedule,within the production calender,managed by the Cell Controller

e) It generates the commercial offer based on the calculated data relevant to the submitted drawing in the quantity requested, using the given mark-up or

alternatively aiming at the requested profit of the FMC on account of the scheduled production. The system will analyze the production volume booked (hours) considering the sales price and the expected contribution margin, aiming to generate an offer that will achieve maximum utililazation of the cell with the best margin revenue.

g) It logs the results obtained in manufacturing and compares the data with that estimated , thus generating on-line a database continuously up-dated by the FMC performance.

h) It prints the part-coded delivery note of the shift/daily production, and outputs the value of sales volume manufactured. It generates automatically the invoice at the completion of the batch or,if requested, as per sales and delivery arrangements.

In the background of the Cell Controller the manufacturing cycle runs together with a number of different processes which enable the FMC to perform in the required mode.These will be further analyzed in chapter 3.2 .

2.5 TECHNICAL DATA :-

The following are the basic data for the Machining Centre. In the third part this data will be verified using the results of the " DFD " analysis.

Linear axis

stroke X axis (Rotary table carriage)	mm	820
stroke Y axis (Spindle head carriage)	mm	760
stroke Z axis (Column carriage)	mm	760
Working feed	mm/1'	5-6000
Rapid feed (X - Y axes)	mm/1'	15000
Rapid feed (Z axes)	mm/1'	14400
Acceleration (X - Y axes)	mm/sec2	1500
(Z axis)	mm/sec2	1200
Axis thrust (continous duty)		
(X - Y axes)	N	10000
(Z axis)	N	13000
Electronic system for measuring and control		
(X - Y - Z axes)		optical scales
Headstock balancing (Y axis)		hydraulic

Rotary Table (Rotary axis)

(ISO norms)

Pallet	mm	630 x 630
Pallet weight	kg	275
Reference " T " groove (H 7)	N.1std size	18
Clamping " T " grooves (H 12)	N.4std size	18
Centerline distance between " T " grooves (J 12)	mm	100
Centering hole diameter (H 7)	mm	50
Working height (from pallet surface to floor)	mm	1030
Maximum weight on pallet	kg	1500
Fourth axis divisions	N.	360.000
Maximum revolving diameter	mm	800
Rotary working feed	rpm	0.1-7
Rapid rotary feed	rpm	7
Acceleration	rad/sec2	2
Electronic system for measuring and control (B axis)		encoder
Clamping system (B axis)		hydraulic

Spindle Head

Maximum power spindle motor

(continous duty).....kW (bhp) 18 (25)

Maximum power spindle motor

(one minute rating).....kW (bhp) 22 (30)

Spindle power .....see table N.

Spindle revolutions .....(min.)..rpm 20

.....(max.)..rpm 3200

Spindle revolutions with constant torque.....rpm 20 -410

Spindle range .....N. 1

Distance between " B " axis centerline and

spindle nose .....(min.)...mm 140

.....(max.)...mm 900

Distance between pallet surface and

spindle centerline .....(min.)...mm 50

.....(max.)...mm 810

Spindle taper ..... ISO 50

Axial clamping force applied on tool-holder..... N 9000

Axes precision

(In accordance with V.D.I.)[10]

Total precision (ref. P)

(X - Y - Z axes).....mm +/-0.008

Average reverse motion error (ref. U)

(X - Y - Z axes).....mm 0.006

Average repeatability error (ref. Ps)

(X - Y - Z axes).....mm +/- 0.005

" B " axis positioning precision .....sec/arc +/- 6

" B " axis average repeatability error.....sec/arc +/- 3

Average positioning error (ref. Pa).....mm 0.01

Tool-changer magazines

Tool-holder seats .....(single chain) .. N. 50

.....(double chain) .. N. 100

Maximum tool length stored .....mm 350

Maximum diameter stored tools .....(one per seat).mm 0 125

.....(one every three seats).mm 0 315

Maximum tool weight.....kg 35

Tool changing time.....sec 9

Chip to chip tool changing time .....sec 13

Installation requirements

Compressed air .....bar 6

Average compressed air comsumption m3/h 5

Minimum coolant delivery .....l/1' 60

Total power installed .....kVA 65

2.6 STRUCTURES

The design of the FMC structures is influenced by different expectations and criteria :

1) The design must consider the possibility of reducing as much as possible the dismantling after factory tests: this for the reduction of shipping and installation costs.

2) The number of machines to be produced is a driving factor for the manufacturing policy.

Large numbers may give the opportunity to use cast iron that gives some technical advantages, i.e.

- good machineability compared to steel,therefore lower tool bits consumption during manufacturing
- good thermal stability
- Possibility to generate the required guide-ways out of the structure design, but requiring very tight quality control on the cast parts , the grinding and hardening operations.

At the same time the use of cast iron forces the manufacturer to:-

- invest in moulds
- storage space
- finance larger production batches compared with

fabricated structures

- accept a longer amount of Work in Process

The company management is called with decisions on this and other similar subjects with many consideraions to be made, for example :-

Foundry requests on batch sizes

Transport costs

Storage space

Total number of FMC to yearly produce

In-house make or buy policy

project cash-flow plan

MACHINING CENTRE

See sketch N. 2 .

For the X and Z axes the design requirements of the structures are rigidity associated with thermal stability.

The design requirements for the Y axis are different :-

It is mandatory to keep the weight as low as possible and put the centre of gravity as close as possible to the guide-way height. This to avoid or minimize a revolving momentum generated by the column and the spindle headstock during rapid travel of the axis for fast positioning,which could cause the column to topple over.

The same consideration must be made for :-

- *Tool-handling system carriage*
- *Shuttle system for pallet transportation*
- *Tool-changer system*

The design of all these units must consider rigidity and weight as priority factors in order to minimize the mechanical stress deriving from high accelerations.

CHAPTER 3

DESIGN APPROACH

3.1 CONVENTIONAL DESIGN APPROACH

The previous chapters described the FMC capabilities,the basic lay-out and the general technical data of a Machining Centre that would be used to assemble the the system.

Here following is a description of:-

- Other elements in the FMC
- Mission assignment
- Conventional project definitions
- Design development guidelines
- Project'MUSTS'
- Structure and main sub-assemblies

The way these considerations are assembled and ordered is obviously the result of a lot of working hours spent on the specific subjects studying problems and implementing different solutions,step by step.

The various requirements involved address us to a broad evaluation that involves :-

- *MANAGEMENT*
- *FINANCE*
- *DESIGN*
- *MANUFACTURING*
- *MARKETING*
- *USE OF THE FMC*

for this reason, in the third and fourth part of the thesis, are re-examining the development of our FMC using the DESIGN FUNCTION DEPLOYMENT for the project,and its results for the evaluation of their impact in the Company's performance.

3.2 OTHER ELEMENTS of THE SYSTEM

The following is a brief description of the elements which, apart from the Machining Centres , comprise the FMC :-

Shuttle System on vertical rail / Pallets Storage line

This unit situated on a 4000 mm length modular welded frame using a pallet storage line , is powered by an AC motor engaging a linear gear bolted along the frame .
The shuttle is mounted on two guideways vertically positioned by means of roller bearing packages .
Positioning of this shuttle is guaranteed by an en-coder mounted axially with the AC motor.Travelling speed 100 m/min. max. weight 1500 Kg + pallet weight .
The shuttle is equipped with a slide similar to those of the pallet exchanger on the MC to ensure the pallet exchange between/to the MC and the pallets storage line .
Devices for gauging the pallet presence and code recognition complete this unit. The shuttle carries on board its own electric cabinet with an intelligent driver for the AC motor; power and signal are received by means of moving contacts set on a duct line for power and signal .
The shuttle is treated as a machine tool axis as far as signals and NC programming are concerned .

The assembly of an FMC or FMS foresees the addition of linear modules and proportional number of storage pallet stations as required by the proposed project.

Rotary Loading Station

Its mechanism is the same as for the pallet exchanger and the shuttle. This unit is , however , manually operated by the worker responsible for loading/unloading the components.
To facilitate the a.m. operations the motorised slide is mounted on a rotating platform.
This unit is completed with a pallet recognition device for presence and code.

Tool Handling System

A 7000 mm steel welded beam , thermally stabilised , provided with guideways bolted in position , constitutes the basic element of the system.
A carriage , motioned by an AC motor , capable of travelling at 100 m/min carries an electrically driven clamping arm and its own electrical cabinet complete with an intelligent axis driver . Positioning feed-back is ensured by an en-coder axially mounted on the AC motor.
The Tool Handling System is treated as an axis of a machine tool as far as signals and NC programming are concerned.

3.3 MISSION ASSIGNMENT

The mission assignment is the basic starting point for the development of the mechanical,electrical, electronic , software DESIGN .

Being the target of this study the development of an ideal FMC for Sub-Contractors or medium sized Companies the above mentioned statement assumes a further meaning . Basically the idea is to design an FMC that can give all the advantages of an highly automated cycle , keeping that degree of simplicity and immediate access that a STAND ALONE machine can give,aiming to remunerative small batch size (1 of).

On account of the above the following definitions :

Machining Centre

It must be configured in a way that inserted in the FMC it can be excluded from it in the event of breakdown or for maintenance requirements. This possibility must not, however, limit or degrade the FMC functionality.

It must be equipped with a CNC capable of operating in a DNC mode once connected to a Cell System Manager Computer. Besides this, the CNC must grant full real

time access to the different machine functions (Tool-changer , maintenance, etc.) .
The lay-out of the FMC must allow the opportunity to work on a STAND ALONE mode keeping thefore enough space between the machine and the pallet's shuttle system,space free from any encumbrance at the ground level. Its CNC is therefore executing the programme received from the Cell System Manager,checking exclusively on the availability of all the necessary resources such as :- tools ; sufficent tool life ; pallet carrying the right part; part programme number corresponding to the tools and parts list.

Shuttle System

This unit can be considered merely as the muscle of the FMC .
It must be fast , reliable , as simple as possible.
In the event of a breakdown it must be possible to remove it in an easy way and quickly.
This unit executes orders arriving from the Cell System Manager upon the request of an MC in need of a fresh pallet with new parts to machine, therefore the only thinking required is about the way to reach the maximun speed , so to minimize the travelling time; at the same time calculate the deceleration ramp.

(Different pallets are carrying different parts and fixtures therefore have different weight).

Tool Room

It simply stores all the tools contained in the FMC.
The Tool Room is connected in real time with the Cell System Manager in order to keep the list of tools stored updated and eventually renewed ; at the same time is connected with the CAD/CAM facility .
The connection with the CAD/CAM facility introduces an important constraint to the designer of the parts; this in the event of in-house manufacturing.
In the event of a part manufactured on the Sub-contracting basis, once that the drawing has been imported in the CAD system , it should light up a red flag for the Cell Manager indicating the requirement for a tool not resident in the Tool Room or resident but not available , etc. .
Access to the loading point must be easy and safe , loading sequences of presetted tools made possible using simple attachments.

Tool Handling System

Like the shuttle for the pallet this unit serves the FMC .
It receives sequences of missions from the Cell System

Manager, to be accomplished in fastest mode.

Its design doesn't have to create any limitations to FMC or to the MC if used as Stand Alone units .

Speed and reliability are the essence of this unit.

Cell System Manager

Is the heart of the FMC . Simultaneously it must keep track of the status of each unit,anticipating when necessary the requirements.

In particular the software modules necessary are :-

A - Management of the pallet handling by means of the shuttle system . Loading sequence manually compiled.

B - Automatic compiling of the loading sequence and its execution ,by means of the shuttle system, verifying in advance :-

- machinability of the component as a function of tools and programme resident in the MC.
- Tool monitoring of all the necessary tools for batch manufacturing as a function of average tool consumption (progressively stored in a specific data base with reference to the drawing number).

C - Tool management control between MC's.

Tools can be exchanged in process between MC's. This function is very useful for reducing the number of tools resident in the Tool Room . The operation is performed by the Tool Handling System upon the order given by the Cell System Manager on the receipt of an MC request or on a basis of an internal simulation test.

D - Management and monitoring of tools in and between Machining Centres and Tool Room.

The operation is performed by the Tool Handling System coordinated by the Cell System Manager. The software module handles the real time updating of the tools data-base. Tool life is monitored associating the tool number with the part programme and the execution time of the block executed in the machining cycle.

This software module complete with graphic display of the tools location , can show with different colours tool life status grading the residual life :-

e.g.

RED = 100 % assigned life

GREEN = 80 % assigned life

YELLOW = 50 % assigned life

WHITE = 30 % assigned life

BLUE = less than 30 % or expired or broken

E) Communication software module between Pre-setting Machine and Cell System Manager .

The machine needs an RS 232C port and compatability with the Cell System Manager.

F) Preventive Maintenance Software Module

This package is based on the management of a data-base relevant to all components of the FMC divided within each operating unit on different levels:-

A) Primary Sub-assemblies

- Their decline can alter precision

B) Secondary Sub-assemblies

- Their decline doesn't alter precision

C) Tertiary Sub-assemblies

(Relevant to ancillary equipment)

- Their decline alter FMC data control

Single Parts belonging to Primary Sub-assemblies

Single Parts belonging to Secondary Sub-assemblies

Single Parts belonging to Tertiary Sub-assemblies

To each Sub-assemblies and to each component is assigned

an expected life, whilst the FMC is under power and the machine tools axes are moving,the cell System Manager updates the data-base filling up the columns relevant to RESIDUAL LIFE and STATISTICAL LIFE.

An interactive user menu can be set to generate printed reports for the Maintenance Department .

G - GUIDED DIAGNOSIS

This software module can be arranged with the cooperation of the Service Department and the R&D .

Resident in the Cell System Manager must be a CAD package with resident files of all the Sub-assemblies identified in the Preventive Maintenance module .

All wiring and hydraulic diagrams , accessible by sections in accordance with the Sub-assemblies division and functionality.

Each known fault is then coded and inserted into a database open to further enlargement on account of additional experience .

When a fault occurs the monitor of The Cell System Manager will blink showing a fault number.

An interactive menu will drive the User through a list of things to do in order to remove the fault if possible.

Messages explaining what and how to carry out small intervention can be easily arranged.

e.g.

FAULT N° 4523 (Blinking)

User enters the Faults Menu

Select fault N° 4523

Fault N° 4523 :-

Microswitch of " Z " axis doesn't return signal.

A) Check electrical scheme section 234/a

B) Check wiring point in electric cabinet panel B , wire n° 1234 red . Location on scheme section 456/e .

C) Check in-put from meter 675 (C panel)

D) Positioning the column at the end stroke of the " Z " axis; check interference with travelling dog .

E) Verify absence of chips externally and coolant internally . (MACHINE TOOL MUST SWITCHED OFF) .

GOOD LUCK !

The database will be progressively enlarged by the service team of the user . The instructions of the guided menu are ideal to support the user of the cell ,

particularly during the night shift avoiding a loss of productivity because of a minor fault.

H) DNC Connection module

Beside the connection capabily of each CNC unit , it is possible to arrange a display of all the listed resident parts programs.

operating with an off-line editor the modification of the part programs will be made possible.

I) CAD/CAM Linking

Standard module to be associated with a Scanner at CAD's end . It introduces constraints warning to be removed by the end-user.

e.g. Tools not resident.

J) Cell System Manager link to an Host Computer

This software module beside the linking capability , must grant to both sides access to the different files . This is a fundamental requirement for the implementation of Production Planning , Statistics , Quality Control , Simulation , General Maintenance Planning and Cost Control.

K) Production Statistics and Faults Reports

Database simply generated by automatically logging the parts programs number executed , the number of

parts produced , the machining and the ancillary times .

The same computing procedure for the Faults Report , accounting for :-

- Faults number , their repetitivity and frequency , typology divided between mechanical/hydraulic/electric/ electronic/software/user's errors .
- Average down time , availabilty ratio , total down time.

All the a.m. data can be obtained from the Cell System Manager on a daily , weekly , monthly , yearly basis , analysed by single production shift or as a whole.

Table N.004 shows the customer oriented software, compiled as described above [8].

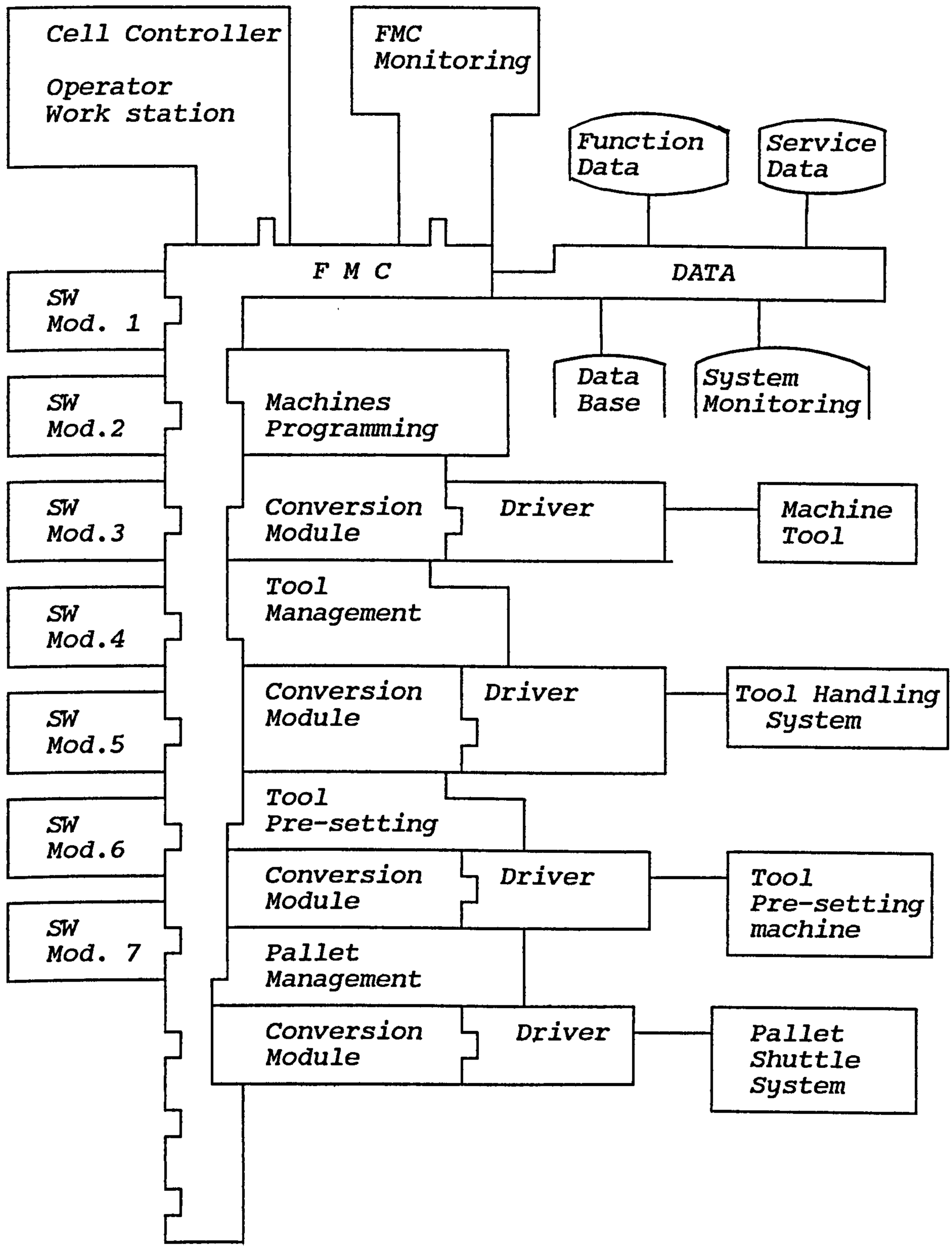

TABLE N.004 : Software modules customer oriented

3.4 MISSION ASSIGNMENT RESUME

CNC on Machining centres :-

- Run parts programs received via DNC from the Cell Manufacturing System Computer.
- Acknowledge the receipt of a new tool,from the Tool Room or an MC , verifying the tool data .
- In the event of in process gauging control confirm or reject part acceptance with reference to a dimension or a plan .
- Require, when missing , the resources indispensible for starting or continuing the manufacturing cycle.

Intelligent axes drives on SHUTTLE SYSTEM and TOOL HANDLING SYSTEM

Their assignment is the acknowledgment of the mission order and the confirmation of its execution.

Cell System Manager

It is the heart and the brain of the FMC .

It coordinates DNC operations generating out of the parts programs the required Tool List , sending the mission orders to the Tool Handling System for the arrangement of the

tool changer chain in respect of the part program execution. Automatically it is executing the research of any required element for the execution of the working cycle, within the FMC. In the event of a missing item or trouble shooting it is interactive with the operator for fast debugging. The Cell System Manager evaluates a number of real time informations , made available to the end user in the format tailored in the various software packages. It connects to an Host Computer System ,making available all data relevant to the FMC status and planning . Simulation schedule and production allocation can be arranged ;considering, however, the size of the investment it is generally preferred to do it at an higher level (HOST COMPUTER).

CHAPTER 4

DETAILED SPECIFICATIONS

4.1 DESIGN DEVELOPMENT GUIDELINES

The design of each part must be considered in a way to maximize the use of standard materials such as drawn steel profiles, commercial sub-assemblies such as rotary tables , linear guide-ways,etc.

- The design of each sub-assembly must allow the test of its own functionality, performance and reliability .

Therefore,beside the mechanical design of each group of components, it is necessary to study the location of hydraulic pipes and rapid manifolds,electrical cables and microswitches,and the use of rapid plugs.

Their rapid connection to suitably located distribution manifold or junction boxes is also essential.

The above in consideration of :-

Production/Purchasing Department that must be free to evaluate group by group the possibility to MAKE or BUY having also the freedom to decide to which level subcontracting will be extended for the assembly of an FMC.

This point is very important as it generates the possibility

to build a net-work of progressively selected subcontractors, each of them organized for the production and the testing operation of different sub-assemblies.From this set-up derives the possibility to manage,on a small scale, a just-in-time policy, granting to a Commercial department the possibility to assure,when required, additional deliveries with reasonable delivery terms.

This designing concept also generates the opportunity to start the production of each batch of machines bearing a fraction of the financial costs generated by a full in-house manufacturing.

In other words the design must be such, not to generate parts to be considered strategic in respect of performance and reliabity,it must grant the possibility not to require the in-house use of expensive gantry milling and grinding machines assuring to the Company running the project the possibility to generate the product with the best ratio between price and performance, with low fixed investment and reasonable financial workload once production is in operation.

This designing concept that introduces manufacturing of separate modules of the machines/FMC has a very positive fallout in-to the Commissioning and Service Departments.

Commissioning of a machine or an FMC/FMS begins with the dismantling operations.Modularity of the sub-assemblies is a key factor for reducing time and lowering the skill level required for the erection of the machine/FMC.
From the service point of view , this concept is fundamental. Having to guarantee the up-time of the FMC, the fast replacement of a collided rotary table, or a swiveling arm of tool-changer is essential and it must be viable just in few hours.
Only a design that foresees complete modularity can grant and reduce the variety of components and sub-assemblies.

Cost control

This operation is very important and sometimes very complex because of unexpected shoopfloor requirements.It becomes a clear operation with each section of the machine /system clearly identified in its own funtionality and therefore cost can be controlled more easily.
To each sub-assembly of the machine/FMC it will be possible to associate the specific tooling and gauging equipment, the cost of eventual test benches to be absorbed over the volume of machine/system produced in the first two or three years.

The structure of the cost control , in the hand of the Production/Purchasing Department and its constant pragmatic application upon the cases and the market circumstances will contribute greatly to the Project performance.
A general under estimation is the value of the work in process and the relevant financial implications.
A new methodology called CMS (Cost Management System) was developed by CAM-I [2] , in part four this subject will be examined .

The FMC could divided in the following way :-

Machining centre - primary sub-assemblies

- *structure x and z axis*
- *structure y axis*
- *headstock and counter balancing system*
- *tool-changer magazine and tool-changer system*
- *rotary table*
- *Frontal twin pallet exchanger*
- *chip conveyor / enclosing guarding with automated door for pallet and tool / coolant pack complete of filtration unit*
- *Electrical cabinet complete of cnc rack,plc,axis drives*

Ancillary items

- All wiring in cable sheaths, assembled with rapid connectors

suitable for workshops environment, ready for application

- All piping cut to measure, complete with due fittings, duly identified , ready for application

- Assembly drawings

- Testing procedures for sub-assemblies / groups .

- Part/part program / required tooling / for performance test

Tool handling system and Tool-Room

- Carriage complete of clamping arm,electrical cabinet

- Linear rail for carriage support complete with linear contacts (standard modules)

- Tool chain for tool-room assembly

- Swiveling arm for loading/unloading station

Ancillary items

- All wiring in cable sheaths, assembled with rapid connectors

suitable for workshops environment,ready for application

- Safety gratings,complete with inspection entrance doors

- Assembly drawings

- Testing procedures for sub-assemblies / groups

- Test cycle for complete assembly and performance test

Shuttle system

- Shuttle main assembly complete with on-board electrical cabinet
- Linear module,complete with guide-ways
- Pallet storage station, complete with retaining pallet mechanism
- Loading/Unloading station

Ancillary items

- All wiring in cable sheaths, assembled with rapid connectors suitable for workshop environment, ready for application
- Assembly drawings
- Testing procedures for sub-assemblies
- Functional performance test

Cell Controller

- Hardware configured
- Out-put devices
- Electrical cabinet

Ancillary items

- Floppy disk for first installation

- All wiring in cable sheaths, assembled with rapid . connectors suitable for workshop environment,ready for application
- Testing procedure for :
  * Communication with each element composing the FMC
  * DNC operations with cnc units
  * Control of each software package performance
  * Control of field initiation for shuttle motion control
  * Tool-room mapping and initiation
  * Run complete dry cycle with all units under coordination
  * Check on data base automatic filing for:
    - Tool life recording
    - Spindle and axis motion for service purposes
    - Tool and pallet exchange operation for statistics and simulation purposes
    - Executed part programs / times / etc

Operations

- In-house quality control upon parts/sub-assemblies arrival
- Assembling of each unit in the configured FMC lay-out

- *Wiring of each unit and FMC interlink*
- *Geometrical test on MC / shuttle / Tool handling system*
- *Funtionality test*
- *Start-up running dry cycle*

As we can appreciate for each of the above mentioned items it is possible to identify an estimated cost,where beside the estimated value of the materials and their manufacturing costs,it is possible to progressively improve the appreciation of all the costs relevant to assembling , testing ,start-up, shipment , erection and commissioning in the customer site.After installation, the Cell controller will keep a full itemized log of all the system defaults. Itemizing the cost of each spare part and the number of hours of intervention, the service maintenance cost will become a valuable indication for the designer ,the Company and the Investor.

4.2 PROJECT'S MUST

The FMC must achieve a great degree of simplicity and reliability, to obtain this a very thoughtful design of each of its parts must be performed. Minimizing their number gives a greater oppurtunity to the Maintenance Department to keep the FMC running, with a lower investment in spare parts.

Direct coupling of the electric motor to the ball-screws motioning the machining centre axis gives higher reliability, enhances precision performance, and allows a substantial saving on useless pulleys,belts or noisy gearboxes.

Power transmission of the spindle motor via a set of multitoothed belts, whenever dual range machining is not required , can be implemented.

Machining centre axis must be fully interchangeable from the mechanical,electric,electronical point of view.

For these reasons :

A) same drawing for ball-screws , support , motor flange and elastic coupling.

B) same electrical motor , drive and feedback unit

C) same end stroke micro-switches

D) same guide-ways and sliding covers

Rotary table adopted from a market supplier must use the same motor as " X-Y-Z " axis for " B "axis positioning and work motion, using the same type of driver.

Coolant Circuits:two independent circuits can be arranged in order to guarantee a high delivery/pressure through the spindle for gun drilling and boring operation .
The second circuit used to shower the tool during milling operation at low pressure but with very high delivery to allow pallet washing operations before pallet change.
Coolant temperature must be controlled. An easy and inexpensive way to do this is by enlarging the volume of the coolant tank , instead of fitting heat exchangers.

Chip Removal:The design of the " T " section frame for " X " and " Z " axis must be made in a way to prevent chips accumulating or piling up anywhere .To obtain this result all surfaces under the pallet level should be inclined towards the chip conveyor unit.
Coolant jets should be positioned in way to avoid chips pile-up.

Electrical Connections:

All connections from/to the electrical cabinets must be implemented using IP54 rapid connectors. On each electrical cabinet of the FMC the roof of it can be used to lodge the

female connectors and the transformer taking the opportunity to avoid heating the inside of the electrical cabinet,however sealed and thermally controlled.

The relatively high cost of this choice, due to the cost of the connectors ,results later in a great saving of time during the dismantling operation and again a greater saving during installation. The cable sheath, duly numbered ,makes the installation fast and reliable without any possibility of a re-wiring mistake.

Shipment: Shipment must be effected by simply dividing the FMC in the following way :-

Machining Centre

- Tool-changer chain complete of swiveling arm
- Machining centre main frame complete with pallet exchanger
- Hydraulic power pack assembly for coolant circuit
- Electrical CNC cabinet and connectored cable sheaths

Tool handling system :

- Tool handling system modules
- Tool handling system carriage complete with electrical arm.
- Electrical cabinet and connectored cable sheaths
- Tool-Room chains

Linear Shuttle system :

- *Shuttle modules*
- *Motorized shuttle system , connectored cable sheaths*
- *Loading/unloading station complete of electrical cabinet*

Cell Controller system :

- *Cell controller hard-ware*
- *Electrical cabinet*

Miscellaneous :

- *Safety fences and installation tools*
- *Installation manuals*

PART TWO

DESIGN FUNCTION DEPLOYMENT

CHAPTER 5

EXISTING " DFD " METHODOLOGY

5.1 STATE OF THE ART SOFTWARE :-

Part one has described the conventional way by which a designer , following the inputs of different departments, tries to focus the project requirements from all points of view.

In table N. 005, a list and a graphic display are showing the CAD/CAM interactive areas [7].

We can realize that during the first 3 stages , the design can be supported by Geometrical Modelling (GM) and the Finite Elements Method (FEM). The fourth stage, Manufacturing drawings ,is supported by Computer Graphics (CG) .

Table N. 005 shows also how the development of the project is supported by currently available techniques, at the same time we must observe that the process starts from a group of product specification generally marketing oriented .

The" Design Function Deployment" methodology [5,6] develops the complete analyses from all points of views in a rational and scientific way .

5.2 DESIGN FUNCTION DEPLOYMENT

DFD is a formal way to address and record the design process enabling a design to be checked against the specifications and also ensures that quality is built into the design .
The method enhances the possibility of " getting it right first time ". As well as ensuring all relevant considerations have been taken into account the DFD process provides a complete auditing record which can be used to assess the integrity of a particular design proposal.
Traditionally a design is completed with the handing over , or issuing , of working drawings and perhaps some supporting calculations and test results. In some cases this can be a formidable amount of paperwork which is not easy to assimilate and crosscheck. When a product becomes obsolete a new generation of products can be designed to replace it. Much of the original design effort is still relevant and some of the experience should be incorporated in the new design. It is very difficult to retrieve this design effort if the original design route can't be recreated.
The DFD charts themselves are used for this design retrieval and can significantly reduce the lead time for the next solution.

Engineering change notices are a major cost driver and there can be considerable difficulty in apportioning costs, especially if subcontractors are involved.Use of DFD charts makes it easier to assess the implications of changes and identify which decisions need to be revised.

The output of the DFD process is a design which has been validated against all the constraints and optimized for some, or many, parameters.Quality is an obvious parameter to optimize for,but it implies a definition and a method of measuring quality.

DFD defines the quality as " The marriage between customer importance rating , which comes from customer requirements weighting,the benchmark position desired by the designer in the market,market relative importance (sales advantage) and and the designer's technical design functions,prioritized to give maximum advantage".

The formal DFD design process is a focussing exercise which highlights the customer's requirements and gives these priority.There are several different customers,both internal and external ,and by regarding the designer as a customer (they usually require something out of the design process !) all the appropriate (manufacturing, use,cost,legal etc.) constraints can be considered simultaneously, giving a concurrent design methodology.

DFD charts are similar to QFD 'House of Quality ' charts, but DFD contains several additions and extra capabilities.

QFD tends to be a reactive system,documenting what already exists.

DFD is proactive system , good for original design as well as modifications,which considers all possible options.

The definition of the 'customer' has been expanded in DFD to include everyone who requires something out of the design process, not just the organization paying the bill.

There are also a number of design tools included in the overarching DFD design methodology. Robust Engineering helps design out dependency on close tolerances,which can be applied to variations in the manufacturing process as well as components dimensions.

Taguchi techniques can be used to determine relative importance of parameters and decrease dependency on some of them .Failure Modes and Effects Analysis increases reliability .

Design retrieval and concurrent engineering is inherent in the DFD method. Trade-off and conflict analysis is easily implemented and techniques for design optimization are available.

An important step in the DFD process is to record the design issues in a solution neutral form before considering possible alternative solutions. The charting process records how the design evolved , why one option was chosen and not others. Table N.006 shows a blank QFD 'House of Quality chart. When completed , and not all the sections are used at once , ALL the relevant design information is collated in a readily accessible form.

CAD/CAM Interactive areas

- *GM : Geometrical Modelling*
- *FEM : Finite Elements Method*
- *CG : Computer Graphics*
- *APNC : Automatic Programming for Numerical Control*
- *CAPP : Computer Aided Process Planning*
- *CAT : Computer Aid Testing*
- *CAOS : Computer Aided Operations*
- *CAMT : Computer Aided Machining Technology*
- *CAPICS : Computer Aided Production Information & Control System*
- *CAPMC : Computer Aided Process Monitoring & Control*
- *DNC : Direct Numerical Control*
- *DDC : Direct Digital Control*
- *FMS : Flexible Manufacturing System*
- *CAQC : Computer Aided Quality Control*
- *CAM : Computer Aided Manufacturing*
- *CAD : Computer Aided Design*
- *CIMS : Computer Integrated Manufacturing Systems*
- *CAE : Computer Aided Engineering*
- *CAIME: Computer Aided Industrial & Manufacturing Engineering*
- *CAPE : Computer Aided Production Engineering*

TABLE N.005 : List of available techniques currently used and application field

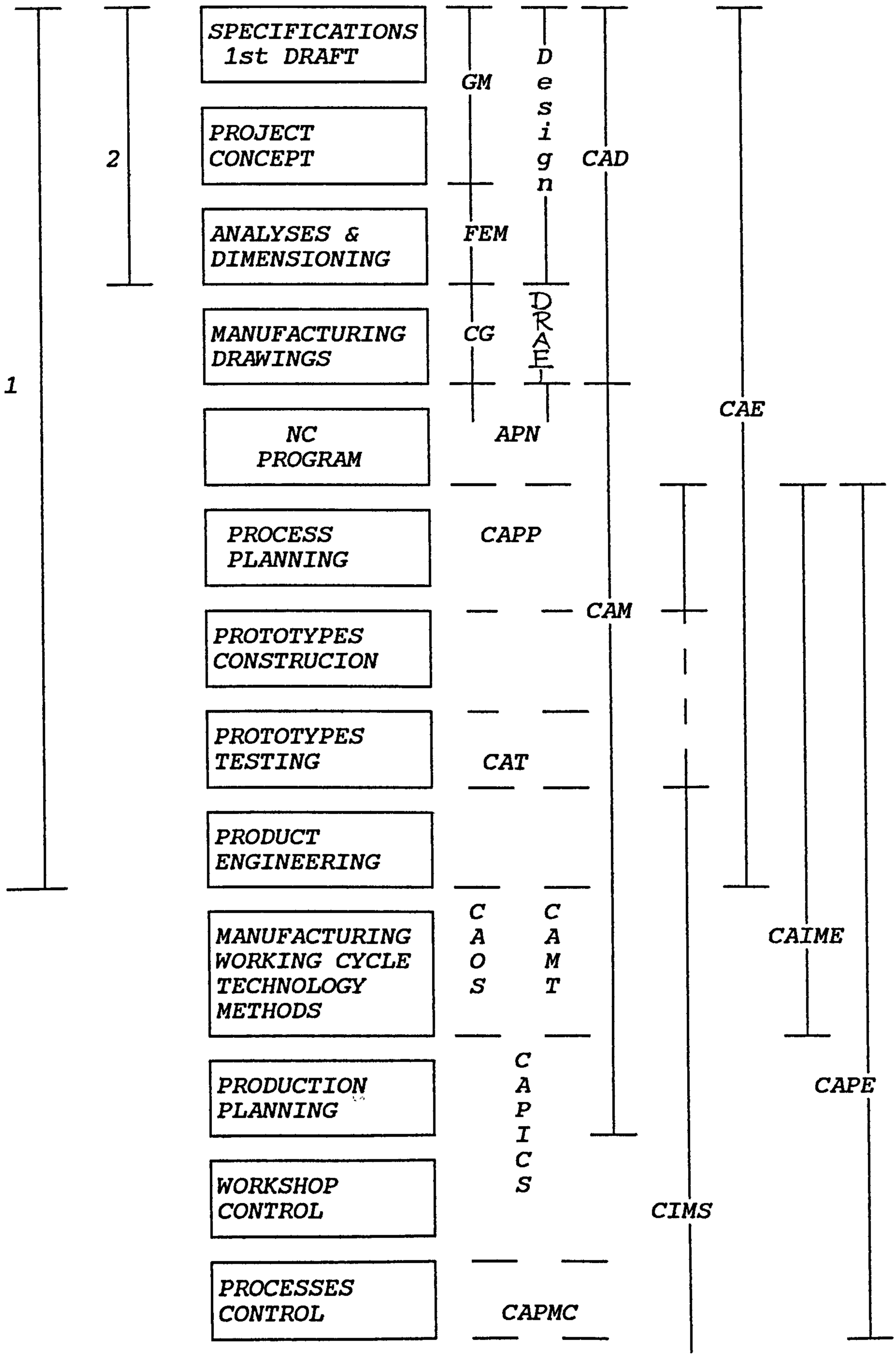
SPECIFICATIONS 1st DRAFT
PROJECT CONCEPT
ANALYSES & DIMENSIONING
MANUFACTURING DRAWINGS
NC PROGRAM
PROCESS PLANNING
PROTOTYPES CONSTRUCION
PROTOTYPES TESTING
PRODUCT ENGINEERING
MANUFACTURING WORKING CYCLE TECHNOLOGY METHODS
PRODUCTION PLANNING
WORKSHOP CONTROL
PROCESSES CONTROL
2
1
GM
FEM
CG
APN
CAPP
CAM
CAT
CAOS
CAMT
CAPICS
CAPMC
Design
DRAFT
CAD
CAE
CIMS
CAIME
CAPE

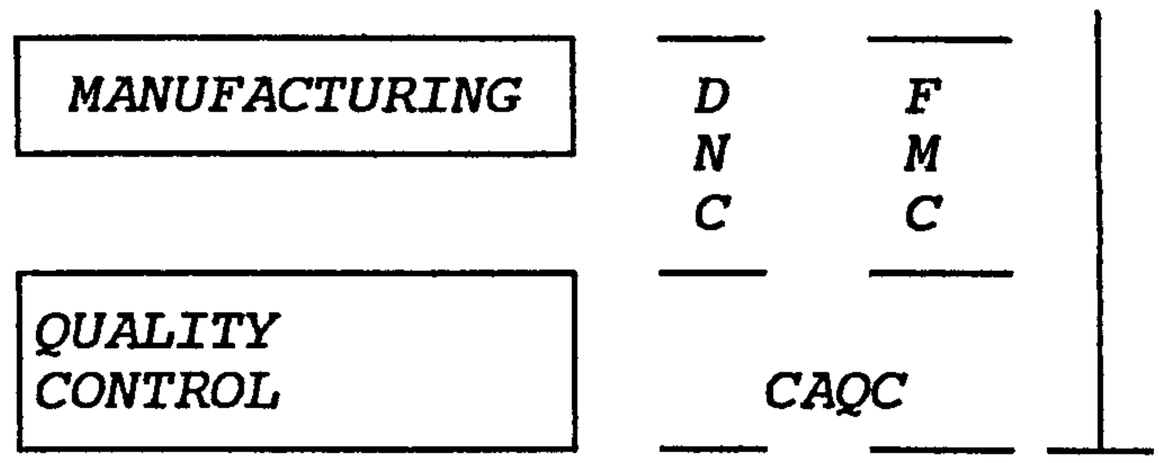

1) Interactive engineering

2) Interactive project

TABLE N. 005 continued : List of available techniques currently used and application field

3 ◎ Strong relationship

2 ○ Average "

1 △ Weak "

◎ Strong Pos.

○ Positive

X Negative

X Strong Neg.

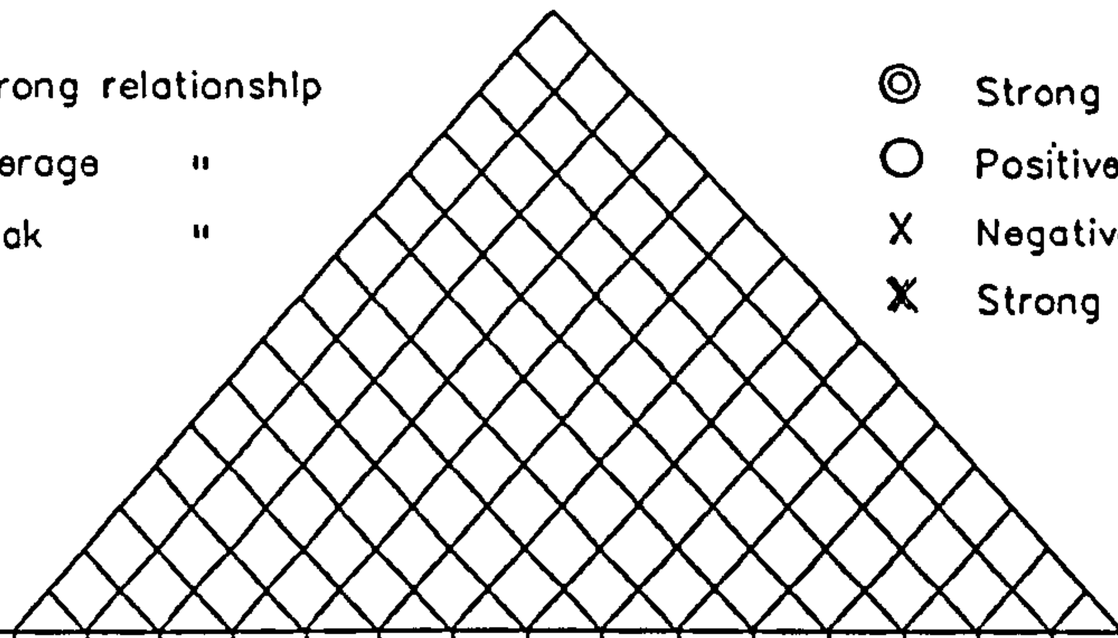

Target Values															
Design Functions / Customer Requirements															
	1	2	3	4	5	6	7	8	9	10	11	12	13	14	15
Technical Difficulty															
Target Values															
Importance Rating	ABS														
	REL														

Form 4 :

Project Title :

↑ higher than better

↓ lower than beter

○ Target Is better

Table no 006 QFD House of Quality

5.3 FIVE COMMON STAGES :-

Design Function Deployment , in its chart based form, commonly consists of five stages [5].
The first stage relates CUSTOMER REQUIREMENTS to DESIGN FUNCTIONS.

STAGE 1 - Translation of Customer requirements
Customer Requirements may be vague, non technical and non specific, e.g. "good quality" " fail safe". The customer has explicit requirements, which he states quite clearly he wants,and IMPLICIT requirements which he hasn't mentioned, but experienced designers know are necessary.
The customer doesn't always know what he wants and relies on the designer to 'come up with something that does the job'. There is always more than one customer, both in house and outside. There is a customer who will be paying the bill, there are statutory regulations,there are in house policy rules , and there are manufacturing constraints,there are also requirements on profit margin and return of investment - our shareholders viewed as customer. ISO standards and legislation (particularly product liability and any specialist legal requirements such as safety and health) can also be regarded as customers, since they have requirements

which need to be considered at this stage. All these have general requirements or " WHATS ".

Design functions are technically precise and are written by the designer.They are the " HOWS " in this first stage. They could require specifications or tools techniques. There is a translation between the imprecise customer requirements and the corresponding design functions.For example the customer wants a car suspension with a " good ride ".

The corresponding design functions are good road holding, good cornering, suspension geometry , spring and damper rates.

One design function could meet several requirements.

One requirement may need several functions at different " strengths ".

The relationship between customer requirements (WHATS) and design functions (HOWS) can be written as a MATRIX with STRONG , MEDIUM and WEAK relationships. Blank rows and columns indicate either the design function is superfluous or nothing is being done to satisfy a particular customer requirement.

The matrix can be filled in with either numbers or symbols.

The first DFD chart considers customer requirements and design functions in a very general sense. The second DFD

chart,still in stage 1,refines the customer requirements into PRIMARY,SECONDARY, and TERTIARY,which are subsets of each other . If the tertiary requirements can be met then the secondary and the primary ones will also be met. If numbers are used each customer requirement is given in a rating and the importance of each design function is calculated as a sum of all ratings x strength (1-weak, 3-medium, 9-strong). Not all the design functions are necessarily carried on to stage two.

Some of the design functions can be given precise numerical values at this point,the " HOW MUCH " table.

These can be regarded as precise measured specifications.

A BENCHMARK column is helpful at this stage .

There can be benchmarks for every competitor's products, testing existing designs against both customer requirements and technical design functions,and benchmarks for any of our existing products and any design proposal we have so far.

The benchmarks help us assess how far we have met the customers requirements and identifies any weakness in our and competitors' designs.

Many of the design functions may interact with each other, for example, cost against providing extra functions and facilities which may not be needed.The 'HOUSE OF QUALITY '

[3] provides a means to assess these interactions between the " HOWS " . There are positive and negative values in the interaction table.

At the end of stage one the proposals are in a solution neutral form i.e. they refer to no particular design or proposal, but we have a very clear idea of exactly what is required and the likely design tools needed.

STAGE 2 - Alternative solutions and options

The Design function of stage 1 become the requirement of stage 2 - the " HOWS " are now " WHATS " [3].
A brainstorming technique is used to generate possible solutions and techniques to meet the design functions of stage 1.Any and every option should be considered and entered into the charts as possibilities.There are positive and negative relations between the " HOWS " and the " WHATS ". There is also an interaction between the " HOWS " and the " WHATS ". There is also an interaction between the " HOWS ". Each of the options can be grouped into mutually exclusive sets.Conflict and trade-off analysis is used to eliminate non viable options.

The viable options are then carried forward to the next chart and non viable possibilities filtered out. The selection criteria at this stage are very general and based mostly on technical feasibility and cost. Does one option cost five times more than another ? Does it break the laws of physics?

There can be many different possible solutions, only one of which will be chosen.
Competing options may be called different 'architectures '.

Each different option or architecture could be divided into subsystems and there could be several different options for designing each subsystem. These different subsystem options are called ' layouts '. Each different architecture, or major design option , could have several different subsystems and each subsystem could have several mutually exclusive possible solutions or layouts. The total number of charts begins to expand rapidly at this point,though many of the options and possible routes will not be taken any further. At the end of stage two many major design decisions have been taken and left with tightly specified options with which to begin the detailed design work [5].

STAGE 3 - Actionable design options

Each subsystem can now be designed in detail to identify constituent parts. Again each subsystem could have many different solutions with different combinations of parts. Typical design decisions at this level are fastener selection,bearing selection etc., involving manufacturers catalogues. Typical design considerations are design for manufacture, design for assembly, design retrieval and in house design policy. Several of the different options may be ruled out at this stage, and in extreme cases some of the

earlier stage 2 choices may need to be reconsidered.
This stage could also include preliminary selection of materials and manufacturing methods, overlapping somewhat with the next stage.
At the end of stage three we have a set of working drawings and a complete parts list.This is the first time the CAD system has been used to generate drawings, i.e. after all the major decisions have been taken. There may be different architecture and layouts left for consideration at this stage, but all of them will meet the basic specifications, on technical grounds.

Stage 4 - Measurable manufacturing process parameters

Once the parts lists have been defined the manufacturing methods are established. This includes raw material form,machines used (in a general sense), and when appropriate NC part programs. The main considerations at this stage are manufacturing constraints. Again there may be several different options and some of the previous choices may need to be revised. Ideally all the viable options would be kept open until this stage is reached, then the best architecture and layout can be chosen based on complete

specifications and manufacturing constraints. Sometimes it may be advantageous to leave different options open until stage 5.

Stage 4 essentially provides the CADCAM link and at the end of this stage production could begin. We have a design, or many designs, which meet all the technical specifications and the manufacturing constraints.

STAGE 5 - Detailed production plans

This contains all the parts lists and any critical manufacturing process parameters. The informations in this charts could be fed directly into an MRP system and used to drive a sales-led master production schedule. The charts contain the parts lists from stage 4 and detailed specific production machines.

If different design options , or layouts, are available at this stage they could be used in an MRP 11 system to simulate different production methods and strategies,the final design decisions would then be optimized mostly for production constraints.

5.4 DESIGN FUNCTION DEPLOYMENT CHARTS :-

There can be a lot of information in each DFD chart and , in general , there would be many charts for each stage in the design process.Not every field in each chart is used. Many of the entries are subjective and can be debated , but the important idea is that they are written down and considered. The five stages could be merged depending on the design problem and there is quite a lot of common ground between the different chart stages, which frequently overlap.

STAGE 1 CHARTS

1) Customer requirements

The customer requirements are divided into primary,secondary and tertiary requirements.The importance rating and serial number for each requirement is also included. The tertiary requirements can be regarded as customer ' WHATS ' for which ' HOWS ' (technical design functions) have to be found [5].

2) Design Functions

These are the ' HOWS ' and are technically precise ideas or design tools, as written by designer. Again they could be broken down into primary , secondary and tertiary

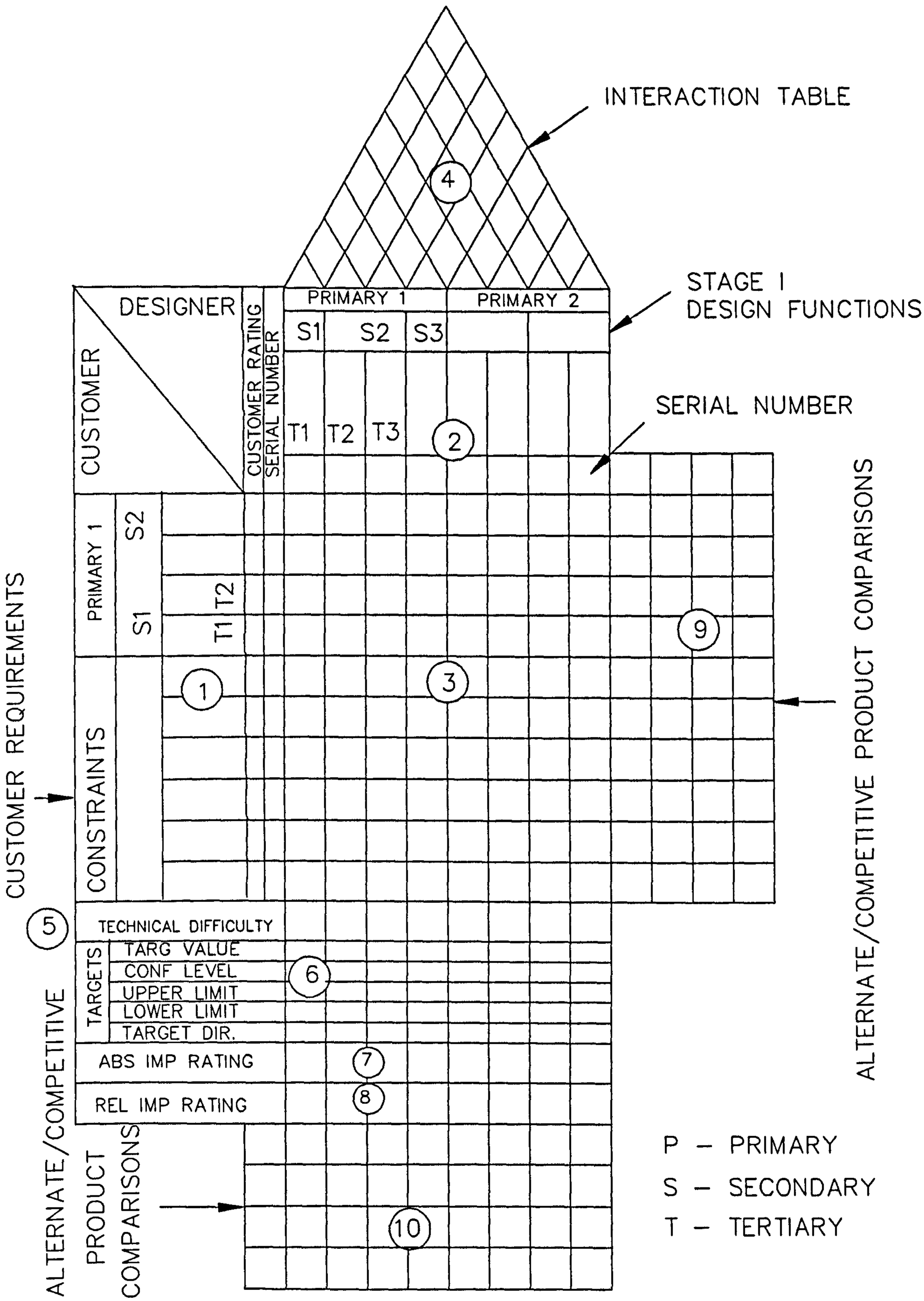

Table no 007 Stage 1 DFD chart

requirements . This block also contains a serial number for each design function. The third level are measurable design functions and these may, or may not, have a corresponding numerical value in the ' HOW MUCH ' field .

3) Relationship Matrix

There are two ways of completing the relationship matrix. Symbols can be used to give ' STRONG ', ' MEDIUM ' or ' WEAK '. Numbers,1,3 or 9 are also useful in later stages. Symbols are used in the very first charts. They tell us if a particular design function can satisfy many customer requirements or if nothing is being done to satisfy some particular requirement.It may be necessary to change the design functions to ensure every requirement is addressed. At this stage ideas of ' GOOD ' and ' BAD ' are not considered, and all the numbers,if used,are positive. Blank rows and columns are important at this stage - either we have a redundant design function or are not doing anything to satisfy a particular requirement.

4) Correlation matrix

In many cases the design functions have a bearing on each other and changing one will affect some other aspect of the design. It does not always apply to stage 1 charts.

5) Technical difficulty

This ranks each design function according to technical difficulty - typically from 1 to 10.

6) Target information

This field contains all numerical information associated with the targets for each design function . There are upper and lower limits, the target value itself, the degree of confidence in the target value and the target improvement direction.

7 & 8) Importance Rating

The absolute importance rating of the design function is calculated by multiplying the customer supplied priority by the relationship strength and adding. The relative importance is just the ranking of each absolute importance, and it tells us which design functions to concentrate on.

9) Competitive Benchmark

This table assess how well, or badly , the existing competition meets the customer requirements.It can be used to identify

strengths and weaknesses in existing products.

10) Competitive assessment

This compares any of our existing designs with the proposed design functions and is used to highlight any defects or strengths.

STAGE 2 CHARTS

1) WHAT Design Functions

These are copied directly from stage 1 design functions, complete with target values, improvement direction , confidence levels, importance rating and serial number.

2) HOW Design functions

This row is filled in from the results of a brain - storming exercise and represents different possible options.Mutually exclusive options can be grouped together in adjacent columns,which helps the selection process. For larger design projects totally different solutions could be regarded as different architecture and may require more than one chart for all the design functions. The design process is then one of selecting between different charts rather than different entries in one chart.

3) Relationship Matrix

This gives the strength of relationship between the ' WHAT ' functions and the ' HOW ' functions. The numbers are now either positive or negative indicating strong positive (+ 9) or strong negative (- 9) or weak negative (- 1)

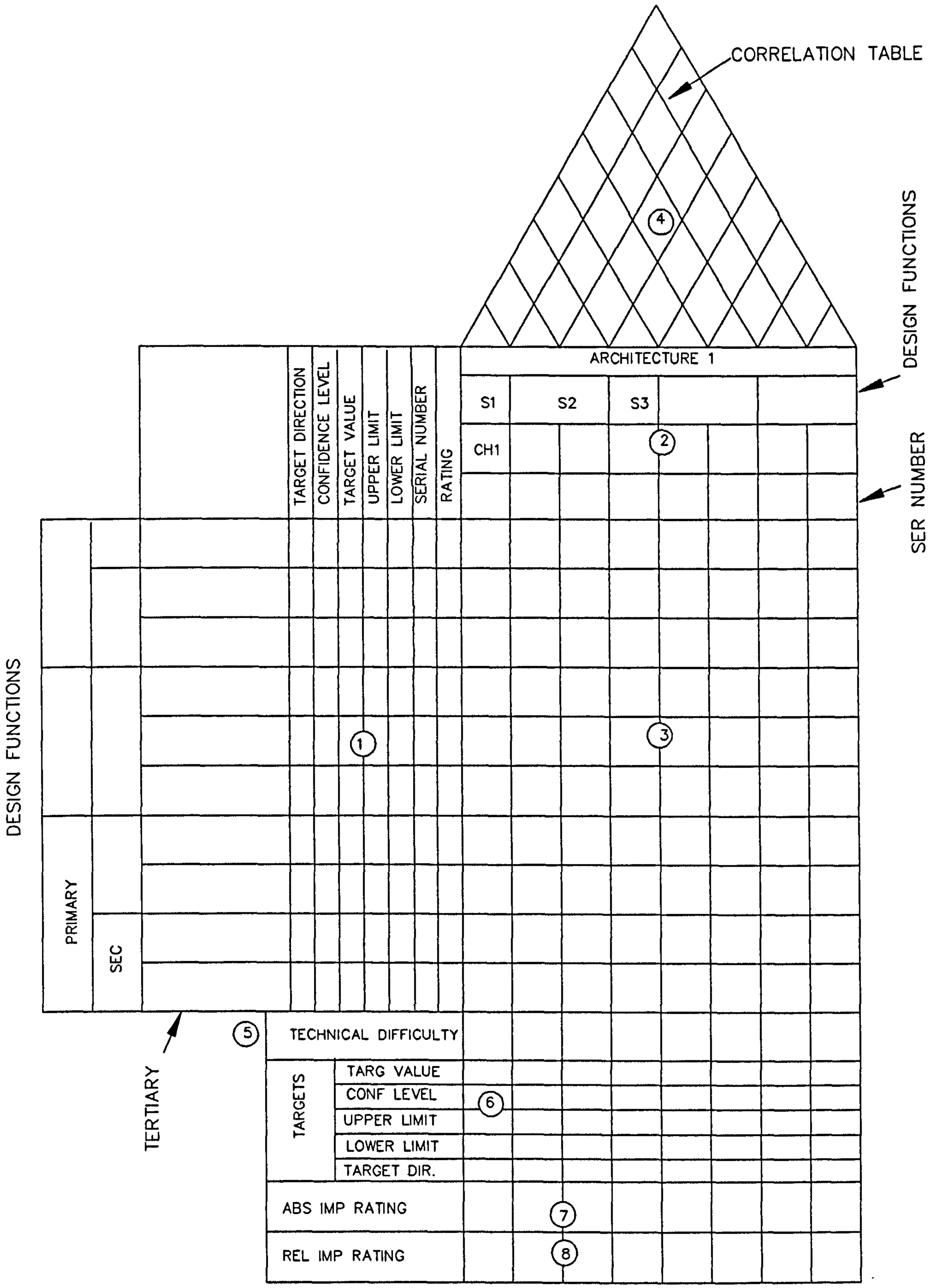

Table no 008 Stage 2 DFD chart

etc. It then becomes possible to select between competing options. Any ' HOW ' column with all negative numbers is discarded, since it has many disadvantages and no benefits. More likely are cases where each option has some advantages and some disadvantages. The importance rating for each ' HOW ' can then be calculated multiplying the ' WHAT ' importance rating by the relationship and adding each column. The ' HOW ' can then be calculated by multiplying the ' WHAT ' importance rating by the relationship strength and adding each column. The ' HOW ' function with the highest score is selected.

Use of DFD charts means that conflict resolution is reduced to arithmetic. In one sense the outcome of the selection process can be manipulated by changing the priorities and relationship strengths , so, the designer can get any answer he wants ! This is not entirely bad since the decision process can be tested and challenged and a permanent record is available. We are still relying on the designer's judgement and experience to a great extent.

4) Correlation Matrix

The correlation matrix is important at the final stage of the charts. The matrix is filled with either positive or numbers and is used to optimize different parameters. A typical problem might be to choose an engine for a power plant.

There is a compromise between weight,power,cost, and size. Ideally we would like maximum power,minimum weight, minimum size and minimum cost. These are conflicting constraints and the correlation matrix defines parameters to optimize for.

STAGE 3 CHARTS

1) The WHAT requirements

These are copied directly from stage ' HOW ' requirements

2) The ' HOW ' requirements

At stage three these are detailed design considerations such as fastener selection,bearing types,gears etc. They are influenced by available components, in house design policy etc. The selected design functions become identified with individual components.

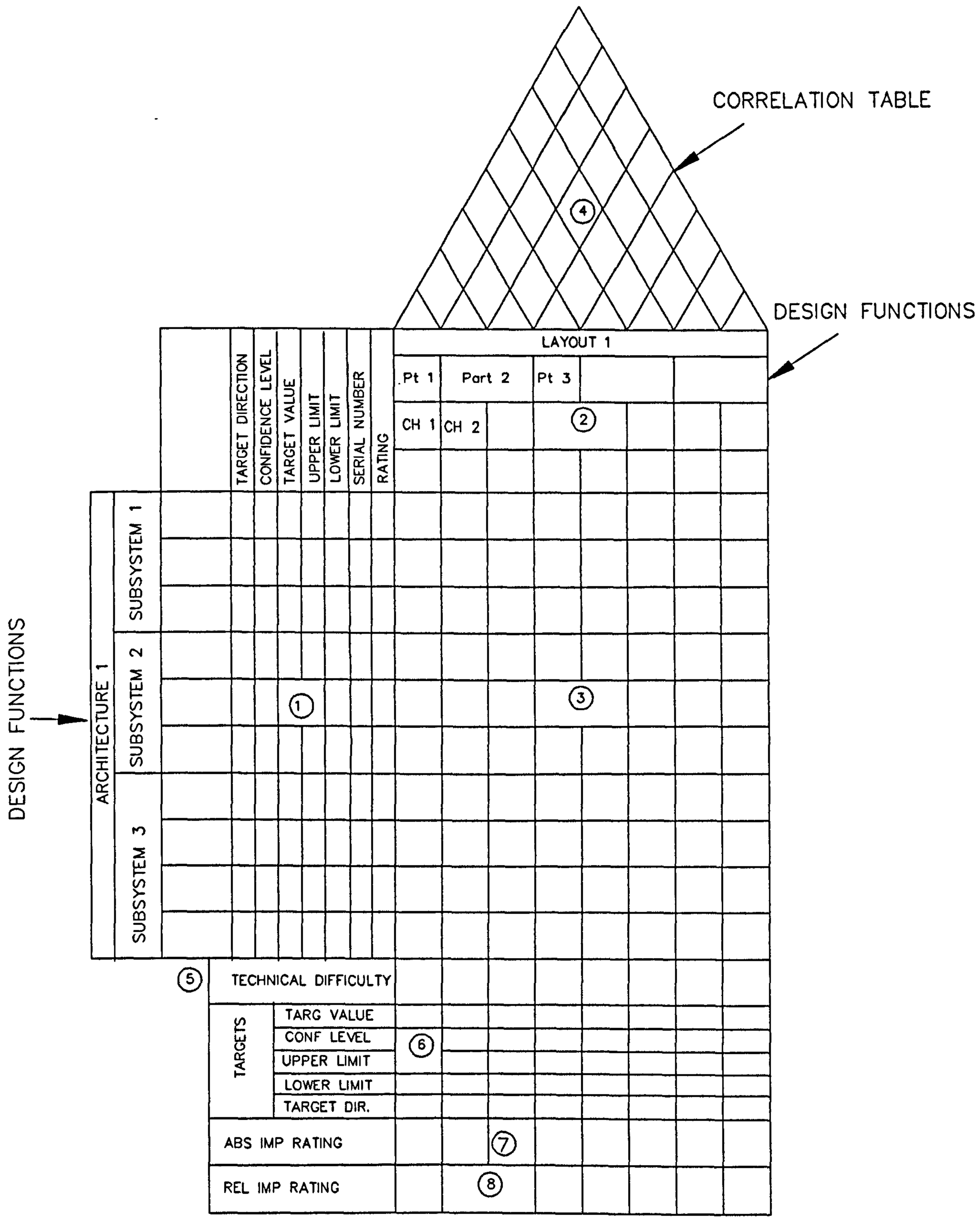

Table no 009 Stage 3 DFD chart

3) Relationship matrix

These are again used for deciding between different options, as in the previous stages.

STAGE 4 CHARTS

1) The ' WHAT ' requirements

These are copied directly from the stage 3 ' HOW ' columns

2) The ' HOW ' requirements

These are manufacturing methods, as generic processes , and proposed raw material form. Again different options might be proposed and selected from.

3) Relationship Matrix

This is part of the selection procedure and helps decide between different manufacturing methods.

4) Process capability

This represents numerical constraints on the manufacturing

methods, and is also used to select between different options.

STAGE 5 CHARTS

1) Parts lists

The parts lists come directly from the stage 4 charts.

2) Process parameters

These include any special tolerances, target values etc. and are directly relevant to the production process on specific machines. The information feeds directly into MRP or MRP 11 production scheduling.

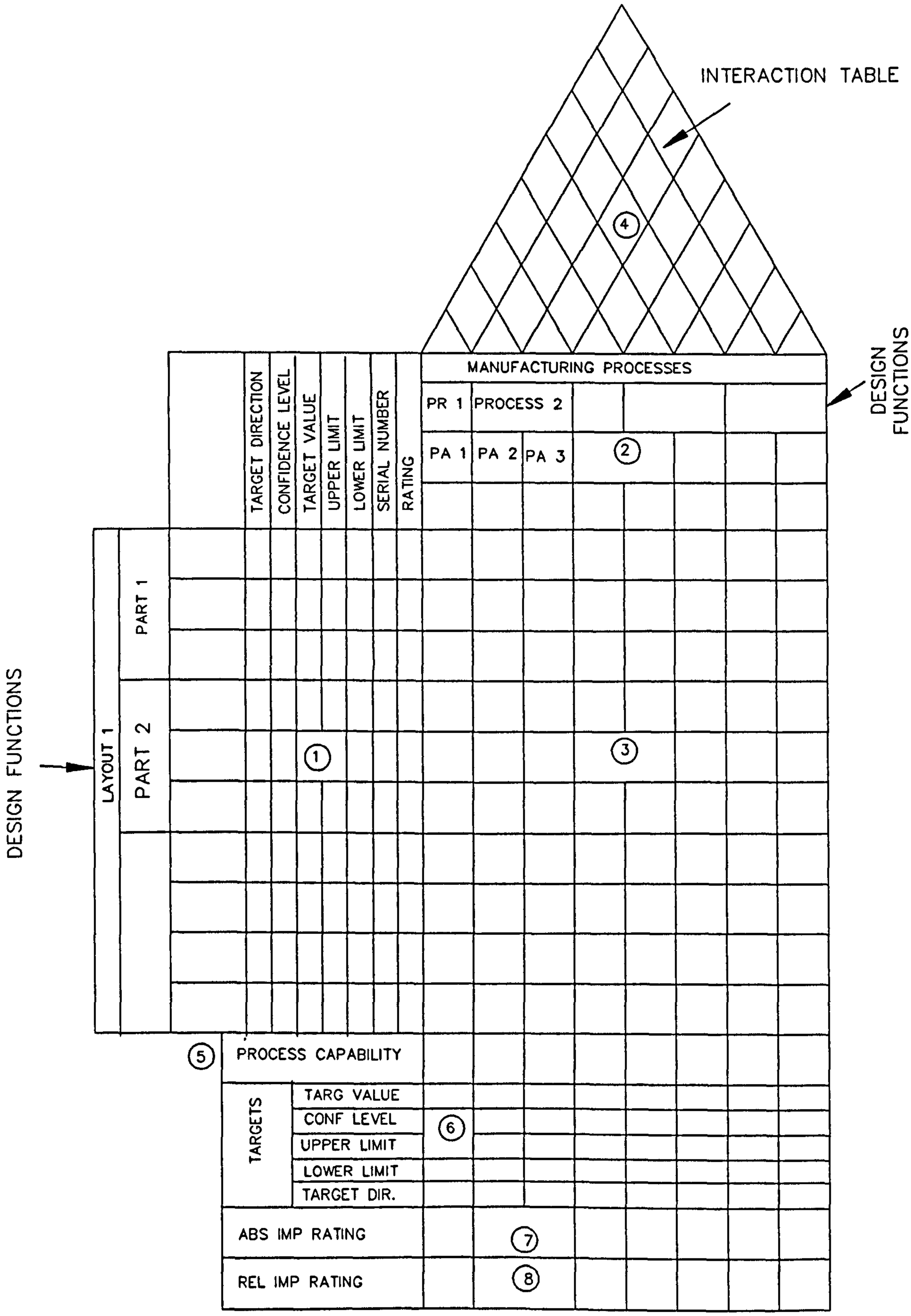

Table no 010 Stage 4 DFD chart

LAYOUT															
		PART 1													
		MP 2							MP 1						
		PR 1			PR 2				PR 1						
														LOWER LIM	
														UPPER LIM	
														TARG VAL	
														CONF LEVEL	
														TARG DIR	
														PR CAP	
														IMP RAT	
															OPERATION PLANNING
														ECON BATCH SIZE	QUANTITY ECONOMICS
														SETTING	
														TOOL CHANGE	
														WASTE/PIECE	
														DIRECT MATERIAL	MATERIAL
														STANDARD SIZE	
														COST/WEIGHT	
														INDIRECT MATERIAL	
														EASE OF MANUFACTURE	
														DIRECT / LAB	OPERATION NFORMATION
														INDIRECT	
														CYCLE TIME	
															MACHINE HOURS
															QUALITY CONTROL

Table no 011 Stage 5 DFD chart

5.5 CONCLUSION ON "DFD":-

All existing design techniques so far developed are industry oriented.

DFD introduces a new powerful design tool which is customer oriented for the complete analysis of the requirements and translates for the industry evaluating the design impact on all the Company activities.

DFD enhances the possibilities of a correct Project Management with a deep and complete analysis generating the correct project support during the development phase and assuring fast retrieval of previous knowledge and experience.

The implementation of DFD represents a real addition to the current design management techniques.

On this account table N.005 can be re-drawn positioning DFD at the top . See table N.012.

CAD/CAM Interactive areas

- GM : Geometrical Modelling
- FEM : Finite Elements Method
- CG : Computer Graphics
- APNC : Automatic Programming for Numerical Control
- CAPP : Computer Aided Process Planning
- CAT : Computer Aid Testing
- CAOS : Computer Aided Operations
- CAMT : Computer Aided Machining Technology
- CAPICS : Computer Aided Production Information & Control System
- CAPMC : Computer Aided Process Monitoring & Control
- DNC : Direct Numerical Control
- DDC : Direct Digital Control
- FMS : Flexible Manufacturing System
- CAQC : Computer Aided Quality Control
- CAM : Computer Aided Manufacturing
- CAD : Computer Aided Design
- CIMS : Computer Integrated Manufacturing Systems
- CAE : Computer Aided Engineering
- CAIME: Computer Aided Industrial & Manufacturing Engineering
- CAPE : Computer Aided Production Engineering

TABLE N.012 :DFD location in state of the art techniques

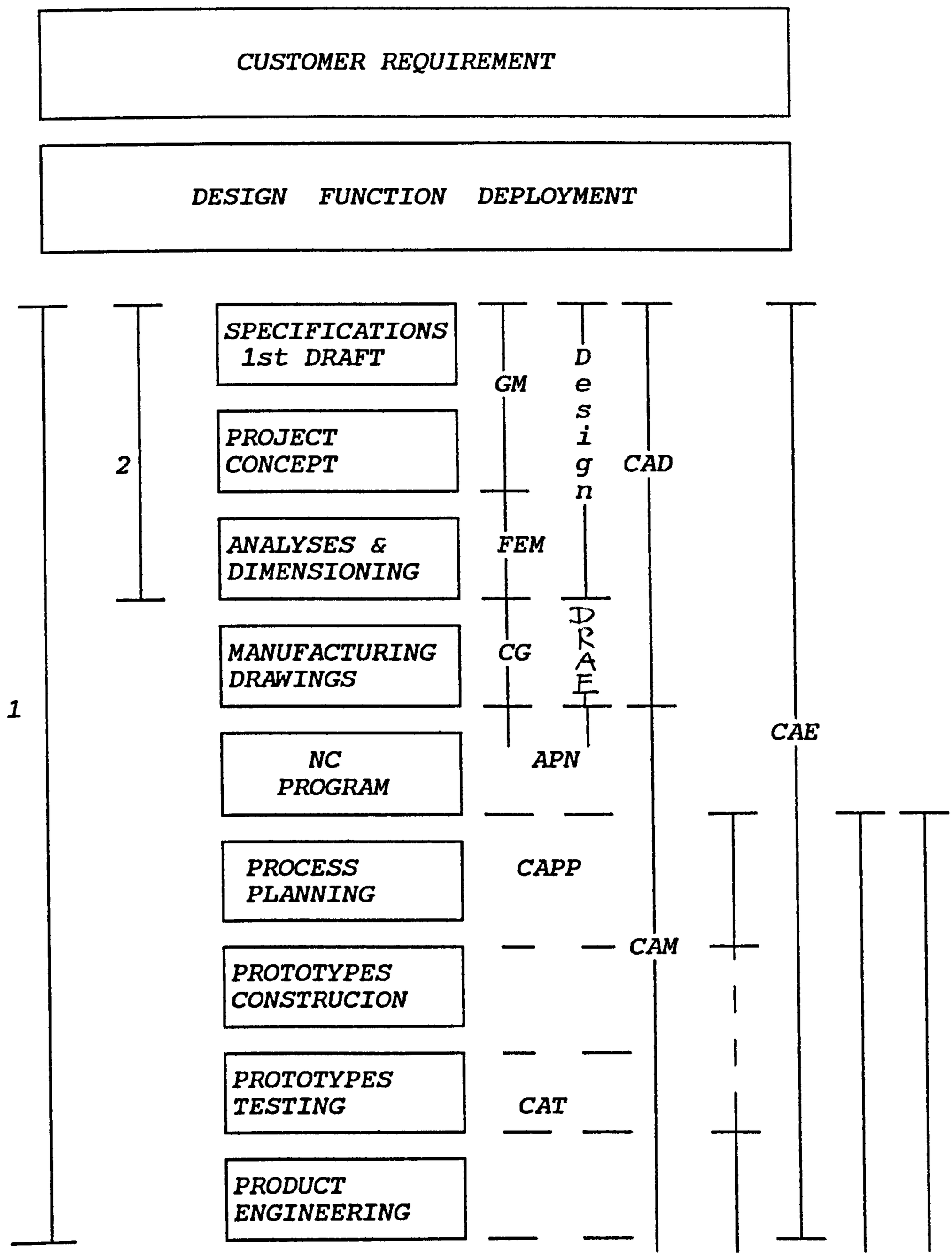

TABLE N.012 continued : DFD location in state of the art techniques.

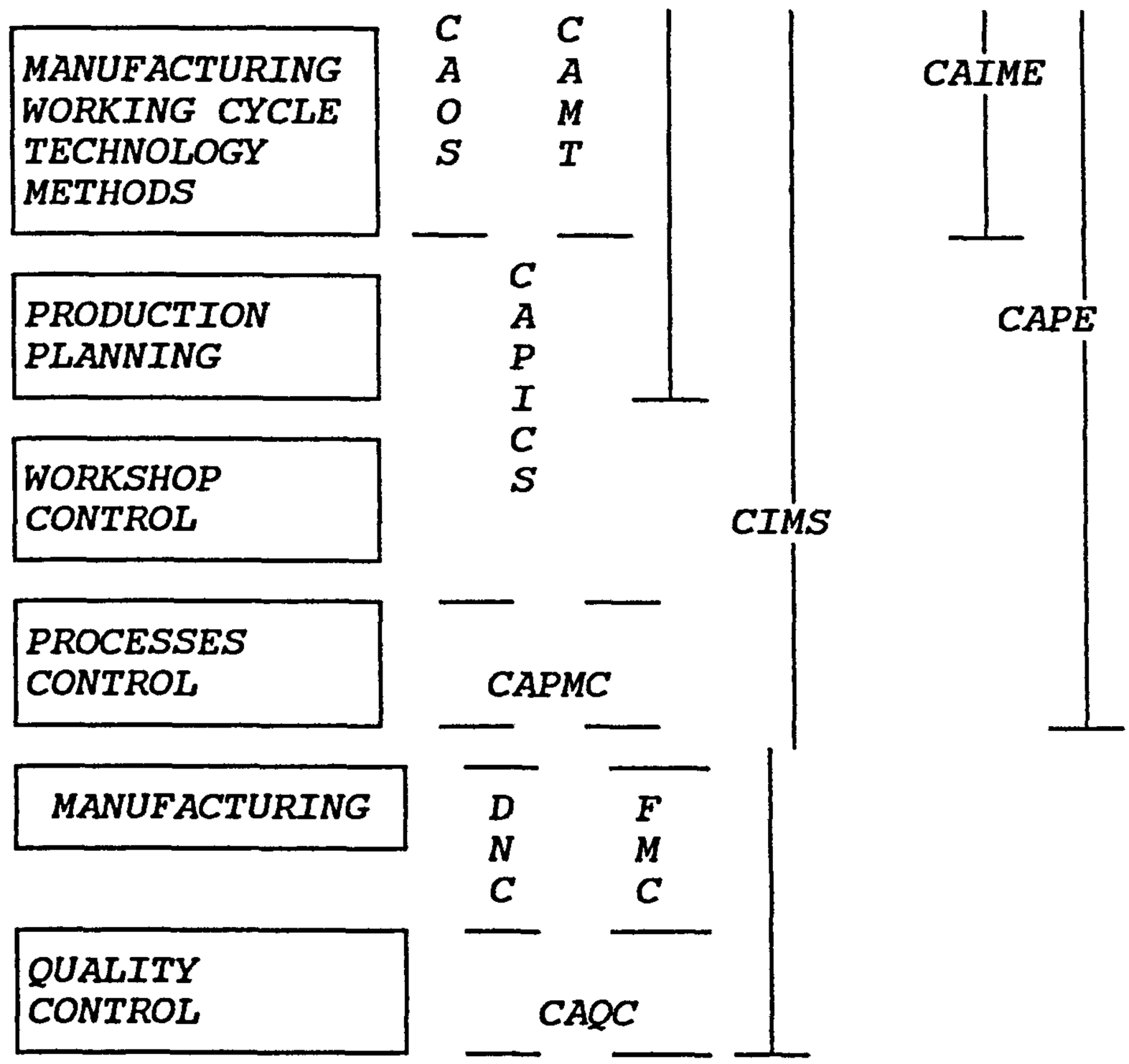

1) Interactive engineering

2) Interactive project

TABLE N. 012 continued : DFD location in state of the art techniques.

PART THREE

APPLICATION OF

DESIGN FUNCTION DEPLOYMENT

CHAPTER 6

ANALYSIS OF A " FLEXIBLE MANUFACTURING CELL "

6.1 INTRODUCTION

The analysis will be focussed on the FMC. For the purpose the charts will be used as for :-

HOW representing the Manufacturers possibilities

WHAT representing the customer requirements expressed in a non technical language , not considering the impact of the requests from all points of view.

CORRELATION used for optimizing the design of sub-assemblies

Each section of the Flexible Manufacturing Cell will be codified as follows for :-

i) Easy handling of the charting operation

ii) For the " Design to cost " analysis examined in PART 4 .

6.2 LIST OF CHARTS

CHARTS	CODE	HOW	WHAT	TABLE N.
Flexible Manufacturing Cell				
0) Top Level		x	x	00
1) Design to cost requirements		x	x	01
2) Design for manufacture requirements		x	x	02
Machining Centre				
1) Design of X-Y-Z Structure	STR	x	x	03
2) Design of Pallet exchanger	TSF	x	x	04
3) Design of Tool-changer mag.	OMC	x	x	05
4) Design of X-Y-Z axes	AXX	x	x	06
	AXY	x	x	
	AXZ	x	x	
5) Design of Spindle	SPI	x	x	07

6) Design of ancillary equip.				
- Electrical cabinet	AEC	x	x	08
- Coolant circuit	ACC	x	x	09
- Shuttle System for Pallet Transportation				
1) Design of Shuttle structure	STS	x	x	10
2) Design of Storage pallet line	SPL	x	x	10
3) Design of Loading/Unloading station	LUS	x	x	11
4) Design of Shuttle integration in the FMC		x	x	12
- Tool Handling System				
1) Design of Carriage and Tool clamping arm	CTC	x	x	13
2) Design of modular gantry guide ways	MGW	x	x	14
- Tool-Room				
1) Design of Tool-Room lay-out		x	x	15
2) Design of Tool-Room integration in the FMC		x	x	15

The Top level charts are completed in full,and examples of the lower levels are given but not all the charts are presented.

6.3 CHARTS READING

The enclosed charts are demonstrating how effective the analysis methodology is, that working like a scanner it is capable of recording an impressive amount of HOW and WHAT functions for every section of the machine/system.

The DFD charts , in the case of the FMC are also evidencing the possibilities to explore an extended standardization process not only within one element of the FMC but through all the related machines.

Another point that was noticed is the correlation between elements of the system .
An attempt to operate a correlation matrix was made but without significant results. Instead it was noticed the development of a " CORRELATION CHAIN " in the horizontal crossing of the HOW and WHAT functions.
In the following paragraph the writer proposes an example of " CORRELATION CHAIN " fully related to the FMC study .

6.4 CORRELATION CHAIN

The chart used is basically the same HOW and WHAT DFD form used for our previous analysis.
In the HOW are arranged the sub-assemblies group identified by their function.

On the left hand side the WHAT divided in two sections.
The first one lists all known basic or past specifications, the second one lists the customer additional requirements.
On the right hand side is a column relevant to current costs.

Costs representing the current cost of known product, the budgeted cost for a new product or the cost modification in the event of modification being required on basic standards.
The example in table N.013 , shows how the request of increased pallet carrying capacity in weight is , by means of the DFD analysis,focussed using the " Correlation chain " concept.

Fast comparison between all the elements composing the previous and newly formed " Correlation chain " addresses the retrieval of all the connected elements affected by the proposed modification.

	HOW															COST	
	structural design coded sub-assemblies															BDG	KNOWN
	1	2	3	4	5	6	7	8	9								
WHAT																	
Basic specifications already existing product																	
10						CORRELATION CHAIN										20	
11																	
12																	
ADDITIONAL REQUIREMENT																	
10 S							NEW CORRELATION CHAIN									28	
11																	
12																	

TABLE N.013 : EXAMPLE OF " CORRELATION CHAIN "

6.5 EXAMPLE OF CORRELATION CHAIN :-

see table N.017

SPECIFICATIONS n. 10 :

Maximum weight on pallet : 1500 kg

NEW REQUIREMENT n. 10 S

Maximum weight on pallet : 2500 kg

HOW : structural elements

1) Rotary table

2) Pallet size

3) Axis design " X " and " Z "

4) Guide-ways

5) Ball-screws

6) Ball-screws support

7) Electric motor

8) Electronic driver

9) Hydraulic pressure clamping circuit (Rotary table)

ETC.

It is necessary to check the physics and the design of the related components shown in the " Correlation Chain".

The way to proceed will then be very simple.

A) Retrieve of " Correlation chain " N 10 relevant to the required subject

B) Comparison with the " Correlation chain " N 10S relevant to the new required performance.

C) Identification of all the items that see their performance parameters stressed by the new conditions

D) Identification of all the necessary steps in order to accept and implement the required modification that may involve :-

- Re-design of structural parts
- Re-evaluation of suppliers technical specification for ready made elements such as Rotary Table , Ball-screws , Motors and drives , Guide-ways,etc.

E) Release of " DFD " analysis report with synthesis of :-

- Previous " Correlation Chain " Elements
- Required " Correlation Chain " Elements (Modifications)
- List of sub-assemblies and relevant elements involved
- List of modifications to be implemented to meet the requirements.

Some sub-assemblies or their elements may require a modification or replacement ,some may not .

For all the items that are members of a correlation chain involving for example mechanical parts , it will be possible to use an algorithmic approach that involves all the relevant parameters to support the simulation phase.

The consequences of performance or design modifications will be automatically verified throughout the correlation chain examined.

The DFD methodology assures the complete and rapid evaluation of the problem from the technical point of view , giving a great opportunity to focus at once all possible items driving costs modifications.

The correlation chain links the design requirements with conceptual solutions and the engineering science for the for the appropriate numerical parameters.

PART FOUR

CONCLUSIONS

CHAPTER 7

SUMMARY DISCUSSION OF RESULTS ON FMC

7.1 INTRODUCTION

The analysis made on the lay-out of the FMC subject of the research,shows with the help of the "DFD" methodology that , it represents the rational starting point for an investment made in the expectation of a gradual expansion of the manufacturing workload requirements.
What was previously obvious or at hand, for an engineer called to analyze a designing concept, is fully and rationally examined with the application of the " DFD ". Moreover it is fully accessible , to a larger group of people,very rapidly and efficiently.

7.2 The scenario

The world industry is nowadays facing one of its greatest challenges since the end of world war ll.

Great changes have taken place in the industrial world, and Automation has played a great role.

Social changes , unions pressure , and developing countries with their low cost laborers , have also increased the speed of changes.

Nations have reacted to these dramatic changes in different ways from the political and technical point of view.

Many European nations lost their Machine Tools industries to the advantage of imported products, mainly from Japan and Korea .

Thousands of studies were made to understand how and what was making their products so successful. Beside government policies supporting their R&D , their industrial investment,etc ,they have proved to have understood the power of" Global Design" that is so well evidenced by the " DFD " analysis fathered by a Japanese Company.

European companies reacted to the sharp competition created by imported products by heavily increasing the volume of sub-contracted work.

For some years the different costs structure between big or medium sized companies and the sub-contractors, mainly working with stand-alone machines,has allowed and helped Europeans to compete.

Machine-Tools Manufacturers did not realize in full the potential of the FLEXIBLE MANUFACTURING CELL engineered for small and medium sized companies.

Analyzing the reasons may be the subject of a different research involving political and commercial factors.

Very briefly we may observe that Governments have sponsored big Companies capable to apply funds for FLEXIBLE MANUFACTURING SYSTEM even in cases where such requests were hiding other or different needs,and Machine-Tools Manufactures did not push the sales of FMC to the advantage of a more lucrative sale of a stand-alone unit at low technical risk.

7.3 Summary of the objectives

In chapter 1 paragraph 1.3 the objectives of this study were expressed in synthesis and for practical reasons the concept of FLEXIBILITY has been identified in:-

A) Machine Flexibility

B) Process Flexibility

C) Product Flexibility

D) Routing Flexibility

E) Volume Flexibility

F) Expansion Flexibility

G) Operation Flexibility

Seven concepts that generally the industry expresses as PRODUCTION FLEXIBILITY.

These seven points of performance were positively identified in the design of the FMC studied , as shown in the dedicated " DFD " chart N. 02.

In addition the chart N. 01 shows how the Machine-Tools Manufacturer can identify the required design options and discriminate among them on account of the manufacturing key elements relevant to its company,in order to achieve the specific internal target of cost/performance that the market will read as price/performance.

7.4 DESIGN / MAKE or BUY / COST CONTROL / RESULT

As anticipated in the course of this study, we have noticed the development of " CORRELATION CHAIN " between the elements examined in the " DFD " charts .

It can be noticed how the elements of paragraph 7.4 are representing themselves a model of" INTERDISCIPLINARY CORRELATION CHAIN ".

The " DFD " charts are evidencing that the modular design rewards the Company with a number of advantages in the:-

Design

Besides developing a rational design with the correct dimensioning of all the elements , it addresses and conditions the Make or Buy policy and viceversa.

Production phase

- Possibility to assemble and test the different sub-assemblies
- Possibility to assemble the FMC once defined the final design configuration
- Possibility to shorten the delivery time as a result of the two above points

Cost Control

The traditional way to account costs in the development of a technical project has through the years changed for the best. The traditional approach to controlling costs has been to break down the management of an enterprise into specialized units with a rigid division of responsibility .

The most advanced methodology organizes the" Cost Control by Activity" [2].

The result

The FMC , implemented on the basis of the lay-out examined with the help of the " DFD " methodology expresses and satisfies the requirements of a Sub-contractor or a medium sized Company generally resumed in :-

- Price/Performance
- Fast Delivery/Low cost installation
- Production flexibility as identified in this study
- Reasonable maintenance costs

The development of an FMC where all sub-assemblies can be identified and treated as independent units serving a defined function effectively supports the" Cost Control by Activity" methodology .

7.5 Project Management

The analysis made with the " DFD " charts has given the possibility to fully appreciate the various design options. The charts N.01 and N.02 clearly outlines considerations relevant to :-

- Marketing as a driving factor for design and manufacturing
- Design to Cost as driving factor for the achievement of the global goals,including Mean Time Between Failure as a consequence of Design , in-house manufacturing and Make or Buy policies.

- *Make or Buy policies as a driving factor lowering the financial entry level to the project avoiding the requirement of fixed investment such as CNC grinding machines for the guide-ways manufacturing etc,but also as a powerful tool to drive and control the Work in Process volume.*

CHAPTER 8

SUMMARY DISCUSSION ON THE USE OF " DFD "

8.1 Charts preparation

The preparation of the charts for the case study was a long and complex task as the methodology has never been used in the machine tool industry before.

All data items were assembled into the charts after collecting information and different considerations on the subject from the various departments of different Machine Tools Manufacturers.

These charts are the evidence for common " DFD " requirements for all the manufacturing companies in the machine tools industry.

8.2 Charts compilation

The compilation of the charts is a very effective way of

of cross examining design options.At this stage,after preparation,it is easy to examine different options. The writer has 14 years experience in the Machine-Tool industry.The retrieval of the charts will give immediate and complete access to this experience.

8.3 " Design Function Deployment "

The methodology used for the analysis of our FMC proved its validity and the following advantageous points were identified :-

A)" DFD" translates the customer language , intended as the cumulation of direct or indirect requirements , and structures the necessary analysis in an accessible way for software existing techniques.As shown in table N.012 " DFD " should be now considered and structured for extensive use in our industries.

B) " DFD " records the product life from the very beginning of its industrial cycle , that is from the basic ideas and the first draft of specifications untill its dismissal from production. All information can be efficiently retrieved and the complete experience is made available to the technicians, giving therefore, a reliable base for further developments or modifications based on full knowledge of past experience.

C) The correct use of " DFD " allows the possibility of suitably meeting all the legal aspects of " Product Liability ".In this way Companies,structuring a legal recording of their " DFD " charts , could avoid many of the problems nowadays arising in the industrial world about this subject.

D) During the use of " DFD " a " CORRELATION CHAIN " was uncovered between the elements of the various units. The observation of the " Correlation Chain " appears to be a very effective way to evaluate design changes or modifications without missing any of the design interactions. The writer proposes the adoption of the " Correlation Chain " as a NEW FACTOR in the " DESIGN FUNCTION DEPLOYMENT ".

E) The expansion of the " Correlation Chain " addresses the concept of " INTERDISCIPLINARY CORRELATION CHAIN " a factor the " DFD " methodology should also try to focus.

CHAPTER 9

SUMMARY CONCLUSIONS

In line with the original objectives of this study, the summary conclusions which can be drawn are :-

a) That the FLEXIBLE MANUFACTURING CELL detailed as a design concept in this thesis meets the design specifications, and is suitable for Sub-Contractors or Medium sized Companies.

b) As a result of the design concept adopted, the FMC is well suited to the production of small batches of components,and thanks to the software modularity adapts easily into the small Companies reality.

c) The thesis has uncovered the concept of "CORRELATION CHAIN" and " INTERDISCIPLINARY CORRELATION CHAIN " .

As a consequence it is the writer's belief that there are 3 starting points in the DESIGN process :-

1st) CUSTOMER REQUIREMENTS

2nd) MANUFACTURING CONSTRAINTS

3rd) AVAILABILITY OF EXISTING OR READY MADE COMPONENTS GENERATING THE " MAKE OR BUY " POLICY.

The DFD methodology provides a formal method to link all of these design constraints and customer requirements together with the designer's previous experience and professional judgement.

The charts represent a distillation of many years cumulative design experience and record this in easily accessible manner.It is much easier for new designer to enter the field and build on previous design work.

Not all the features in DFD where applicable to this particular application.Specifically the correlation matrix was not used and should be replaced by a new concept:- a correlation chain.

CHAPTER 10

RECOMMENDATIONS FOR FURTHER WORK

The FMC described in this thesis represents an evolution of many FMC/FMS engineered and delivered in recent years by Companies that have employed the writer in key positions.

The use of the DFD methodology has enlarged the horizon and a clearer view on many aspects of Design and Manufacturing can be integrated by the view expressed in this thesis about the ready made components generating the "Make or Buy" policy .

This thesis has prepared the ground for further investigations on :-

a) Adaptability of the FMC configuration into the Sub-Contractors / Medium sized Companies and integration in their business reality as well as into the year 2000 business organization

b) " Correlation Chain " as a complementary tool in the " DFD " methodology.

c) The development of a " Make or Buy " policy introducing the use of components and sub-assemblies externally manufactured,increments the MTBF expectations. This assumption derives from the belief that an external supplier, specialized in the production of a specific product can guarantee a far better quality and therefore MTBF, than a product made in-house.
The merger of different manufacturing philosophies, the commercial pressure , and some more factors can sometimes generate unexpected results.
This subject should be analyzed by an interdisciplinary team involving a Statistician.

d)" Interdisciplinary Correlation Chain " should be investigated as a guidance for UNIVERSITIES Study Programs in different disciplines.
e) The top level charts can be expanded to include Design to Cost concepts. This will help in identifying the major cost drivers and enable the higher level charts to be used as a cost estimating tool for preparation of business plan and contract tenders.

REFERENCES

[1] DIEBOLD (1952). Automation.

[2] FABRIZI,D .(1990). Automatizzare : dove,come,quando, perchè. (Pavia :- Dipartimento di Ingegneria Elettrica Università di Pavia).

[3] AKAO,Y (as editor). Quality Function Deployment. Productivity Press Cambridge Mass. ISBN 0-915299-4.

[4] CLAUSING D.PUGH,S."Enhanced Quality Function Deployment". Design and Productivity International Conference,Hawaii 1991.

[5] JEBB,A, SIVALOGNATHNAN S,EVOBUOMWAN N, "Design Function Deployment User GUIDE " City University EDC June 1993.

[6] EDNEY R.C."Introduction to Design Function Deployment" City University EDC September 1993.

[7] COSTA,A.(1984)Interazione aree CAD/CAM.Introduzione al corso "CAM nella produzione meccanica"

[8] COMINCINI,S. (1987) "AUTOMAZIONE OGGI" (Technical Magazine) issue n°0392/8829 Flexible Manufacturing Management.

[9] EDNEY R.C,COMINCINI S ,"DFD charts for design of an FMS " City University EDC Technical report.

[10] V.D.I. Verein Deutche Institute.

[11] COMINCINI S. Traditional design for flexible manufacturing system. Technical report n.82.

[12] Sketches by courtesy of SAIMP SpA,(Italy) , 1986.

Even if not quoted specifically,the following authors and titles were consulted for the preparation of this Thesis :-

[13] Van Houten.F.J.A.M,Van't Erve,A.H.,PART, a Parallel Approach to Computer Aided Process Planning Proceedings of CAPE 4 , Edinburg , 1988.

[14] Tiemersma,J.J.,Kals.H.J.J., The design of a Monitoring and Control System for Small Batch Manufacturing ,20th CIRP International Seminar on Manufacturing Systems , Tibilisi , URSS, June 9-10,1988.

[15] Tiemersma,J.J.,Kals,H.J.J., The design of an Interface Unit for On-line,Real-Time Control within Flexible Manufacturing Systems, 4th International MSTF Conference Stockholm, June 6-9,1989.

[16] Boerma,J.R.,Kals,H.J.J.,Fixture Design with FIXES:- the automatic selection of positioning,clamping and support features for prismatic parts,Annals of CIRP, vol.38,1989.

[17] Kjellberg,T.The Integration of CAD/CAM Based on Product Modelling for better Human Communication, Proceedings of the 16th CIRP Seminar on Manufacturing, Tokyo , 1984.

[18] Yamazaki,K. Trends of ASIC Technologies for Mechatronics Control and Results obtained in the Dovolopmont Work. Second International Summer Seminar, Dubrovnik , August 1987.

APPENDIX I

APPENDIX I

Tree structure of the charts

The DFD charts can be arranged in a top down hierarchical tree structure.The top carts (00,01,02) contain all the major customer requirements and technical design functions in a solution neutral form [5].

The top chart (00) is further refined into four sections, Design to cost /Design for manufacture/Legal and financial / Design for assembly. Two charts (01 and 02) representing structural customer specifications and internal design, manufacturing requirements and constraints are presented . The technical design functions are the same for (01) and (02).

The technical design chart (02) expands into more detailed requirements into three chains (Machining centre - Shuttle system -Handling system). These are still at stage I.

Stage II - conceptual design,stage III - detailed design.

Stage IV a V manufacturing are not presented.

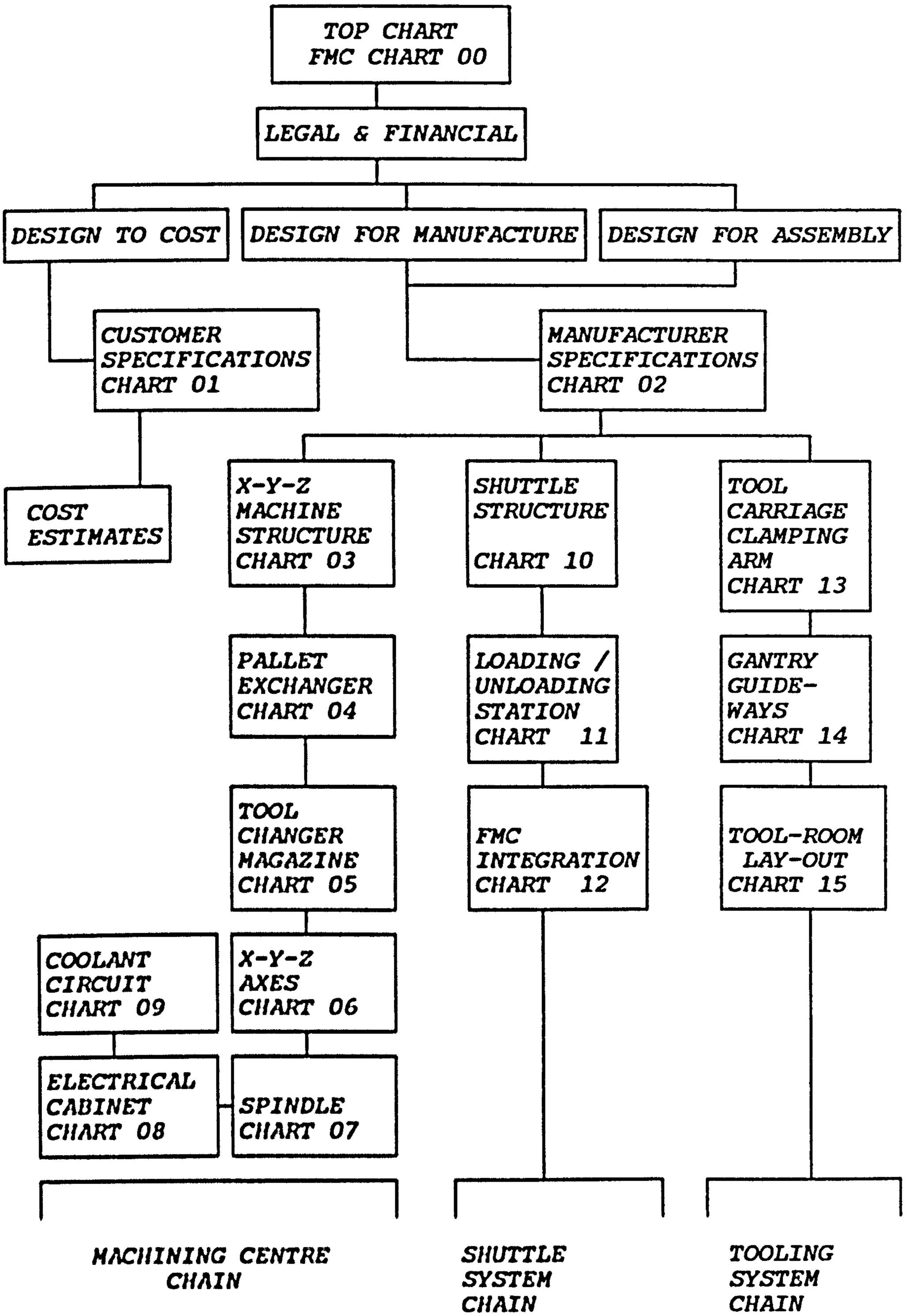
TOP CHART
FMC CHART 00
LEGAL & FINANCIAL
DESIGN TO COST
DESIGN FOR MANUFACTURE
DESIGN FOR ASSEMBLY
CUSTOMER SPECIFICATIONS CHART 01
MANUFACTURER SPECIFICATIONS CHART 02
COST ESTIMATES
X-Y-Z MACHINE STRUCTURE CHART 03
SHUTTLE STRUCTURE CHART 10
TOOL CARRIAGE CLAMPING ARM CHART 13
PALLET EXCHANGER CHART 04
LOADING / UNLOADING STATION CHART 11
GANTRY GUIDE-WAYS CHART 14
TOOL CHANGER MAGAZINE CHART 05
FMC INTEGRATION CHART 12
TOOL-ROOM LAY-OUT CHART 15
COOLANT CIRCUIT CHART 09
X-Y-Z AXES CHART 06
ELECTRICAL CABINET CHART 08
SPINDLE CHART 07
MACHINING CENTRE CHAIN
SHUTTLE SYSTEM CHAIN
TOOLING SYSTEM CHAIN

APPENDIX II

APPENDIX II

Commentary on the DFD charts

Chart 00 :-

This is the top level chart containing all the primary requirements,any modification to the elements of this chart involves major company policy's decision.

WHAT :-

Design to cost, this section may be different for each individual country, and at the same time the company's market strategy may be different (e.g. logistic reasons for service may address different choices).

Design for manufacture, identifies the manufacturing constraints and influences the " Make or Buy " policy.

Legal and financial, this section is positioned at the top of the tree structure meaning that each of the choices made in the other three sections must be examined for :-

- Product liability
- Health and Safety

- *Environment*
- *Project financial requirement*
- *Expected cash-flow*
- *Pending Patent right*

Design for assembly, shows a total relation with all the HOW elements of the chart. It conditions the global result of the project and may determine the success/failure of the product/project.

HOW :-

This row identifies very specific design options that the market may require, also stressed by the competitors designers.

In the case of the FMC/FMS the choice of the CNC package supplier involves a company's policy decision.

The chart 00 shows all available options.

CHART 01 - Design to Cost :-

On account of the marketing strategy the Design to Cost chart identifies the cost target given to the designers.

At the beginning all options are available, through a cost analysis some of them are progressively discarded till the cost target is achieved.

In the case of a highly customized product (plant) the structure of this chart is a very useful tool for the

preparation of the cost estimates and complex quotation (tenders).

CHART 02 - Design for manufacture :-

This chart through the analysis of the in-house manufacturing constraints, is addressing the in-house " Make or Buy " policy .

Great attention must be paid to this for the implication on the company's cash-flow plan.

CHART 03-015 :-

These charts have expanded the detailed design requirements. Each specialized design team will use the relevant charts for the development of the subassemblies.

APPENDIX III

APPENDIX III

Correlation chain within an FMC/FMS

In chapter 6, paragraphs 6.3 and 6.4, the concept of " CORRELATION CHAIN " is discussed.

Some further considerations can be made.

Whenever analyzing top charts, which contain mixed "Customer Specifications" and "Company Requirements" the correlation chain between elements can be identified , in some cases these are correlated but they can not be mathematically treated for an automated engineering analysis.

In the lower charts instead , where machine components are examined and their dimensions are defined on account of conventional loads such as flexion,torsion ,etc, it is possible to generate algorithms that can help in the simulation process for the evaluation of a modification being required

e.g. :

We can consider a Machining Centre with

pallet size	*800x800 mm*
maximum allowable weight	*2500 kg*
linear axes rapid speed	*12000 mm/min*
linear axes feed speed	*5-5000 mm/min*
acceleration on linear axes	*1000 mm/sec2*
table rotation	*0.1-5 rpm*
ball screws diameter X-Y-Z	*50.8 mm*

in the event we would be asked to evaluate the possibility to increase for istance the maximum allowable weight from 2500 kg to 3500 kg the use of the DFD correlation concept should address us to the retrieval of the corresponding algorithms capable to verify the impact of the requested increased performance indicating us the elements that :-

- can allow the increase within the safety factor

- can allow the increase reconsidering the safety factor

- can not accept the requested increase unless reviewed

automatically all the calculations made for the dimensioning of :-

- *guide-ways*
- *ball-screws*

- *table main bearing*
- *ball-screws supports*
- *axes transmission (belts or gears)*
- *axes motors (torque and power)*
- *X axis structure (in the event of an MC like the one of our FMC)*

All the above elements can be reviewed and with an higher level of algorithms even recalculated.

The same thing can be easily appreciated observing the DFD charts of an existing car .

The request of an increase in speed and an higher power delivery of its engine,could be easily assessed providing we have arranged and stored the "correlation chains" in a logical sequence.

Beside the transmission ratios and the engine design for the higher power output and speed it is logical to observe the effect on the different " Correlation Chains " :-

- *Engine*
  - *piston*
  - *valves*
  - *crankshaft*
  - *clutch*
- *Gear-box*

- *Transmission axles*
- *Brakes and pump*
- *Power steering*
- *etc*

Recommendations for further work on this subject were made in chapter 10.

APPENDIX IV

APPENDIX IV

Engineering Sketches

As listed in pages V and VI the sketches reproduced are showing the most important assemblies of the FMC /FMS and the machining centre analyzed.

ENCLOSED

SKETCHES

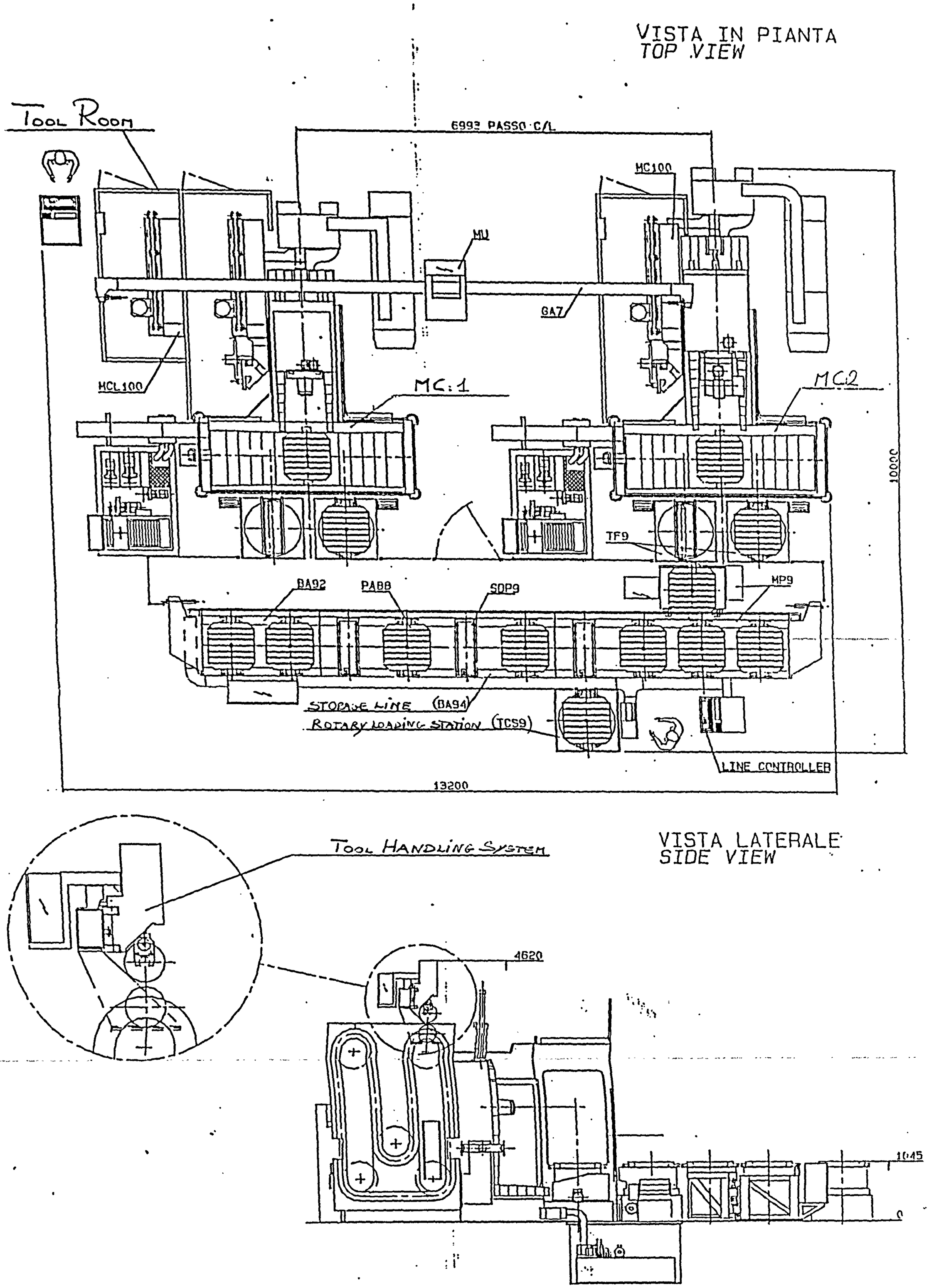

SKETCH N.001

BASIC LAY-OUT OF FLEXIBLE MANUFACTURING CELL

VISTA IN PIANTA
TOP VIEW

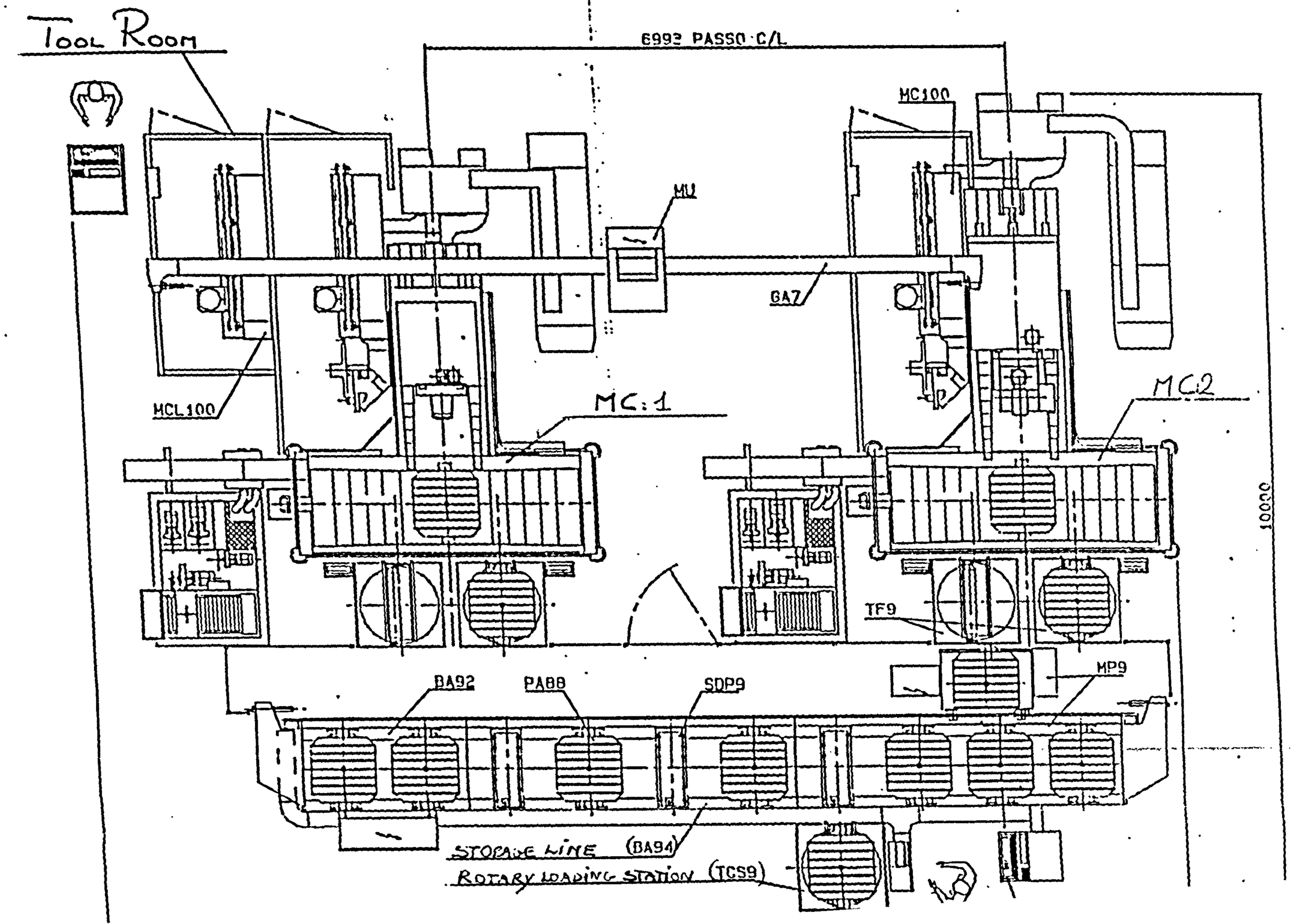

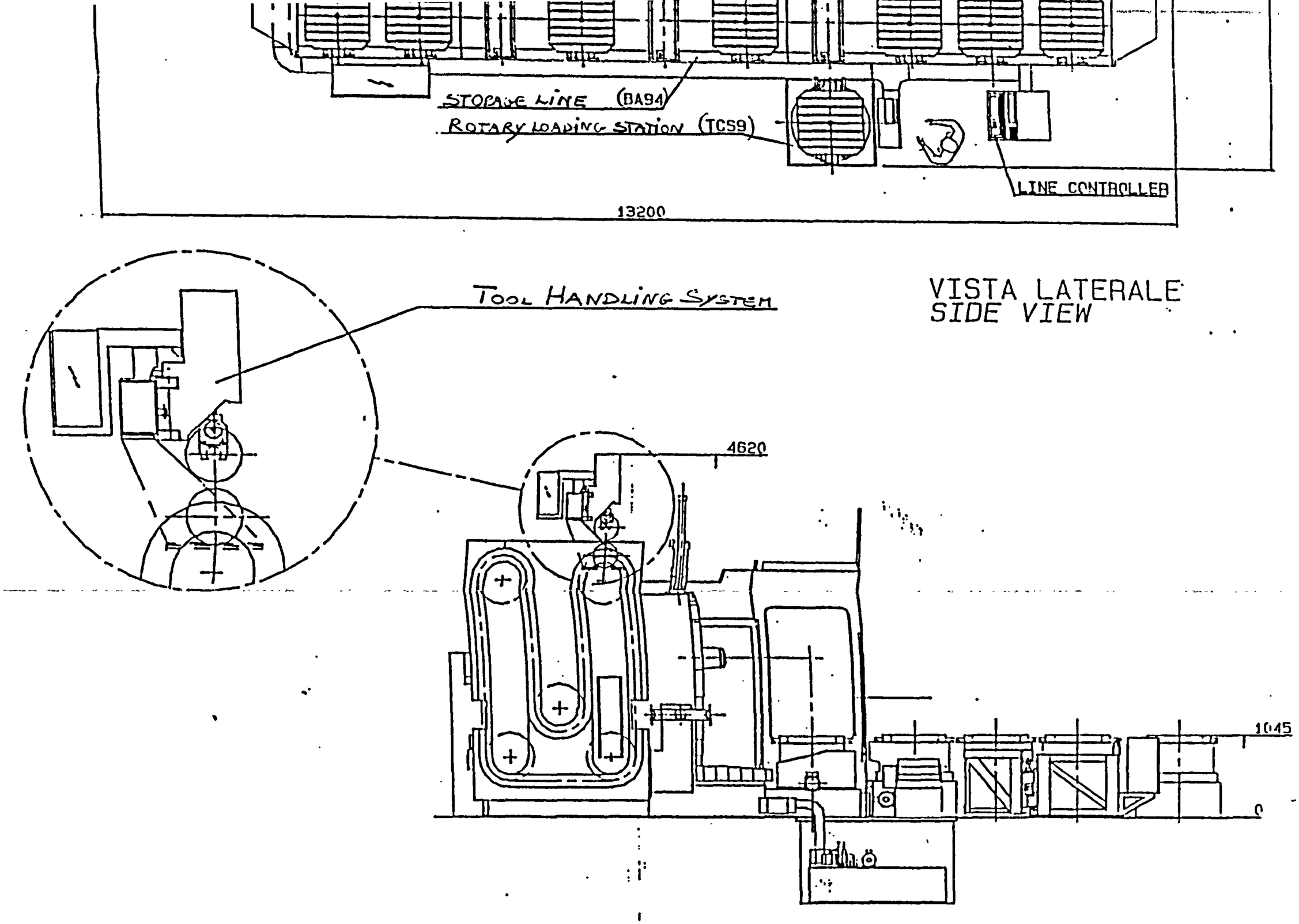

SKETCH N.001

BASIC LAY-OUT OF FLEXIBLE MANUFACTURING CELL

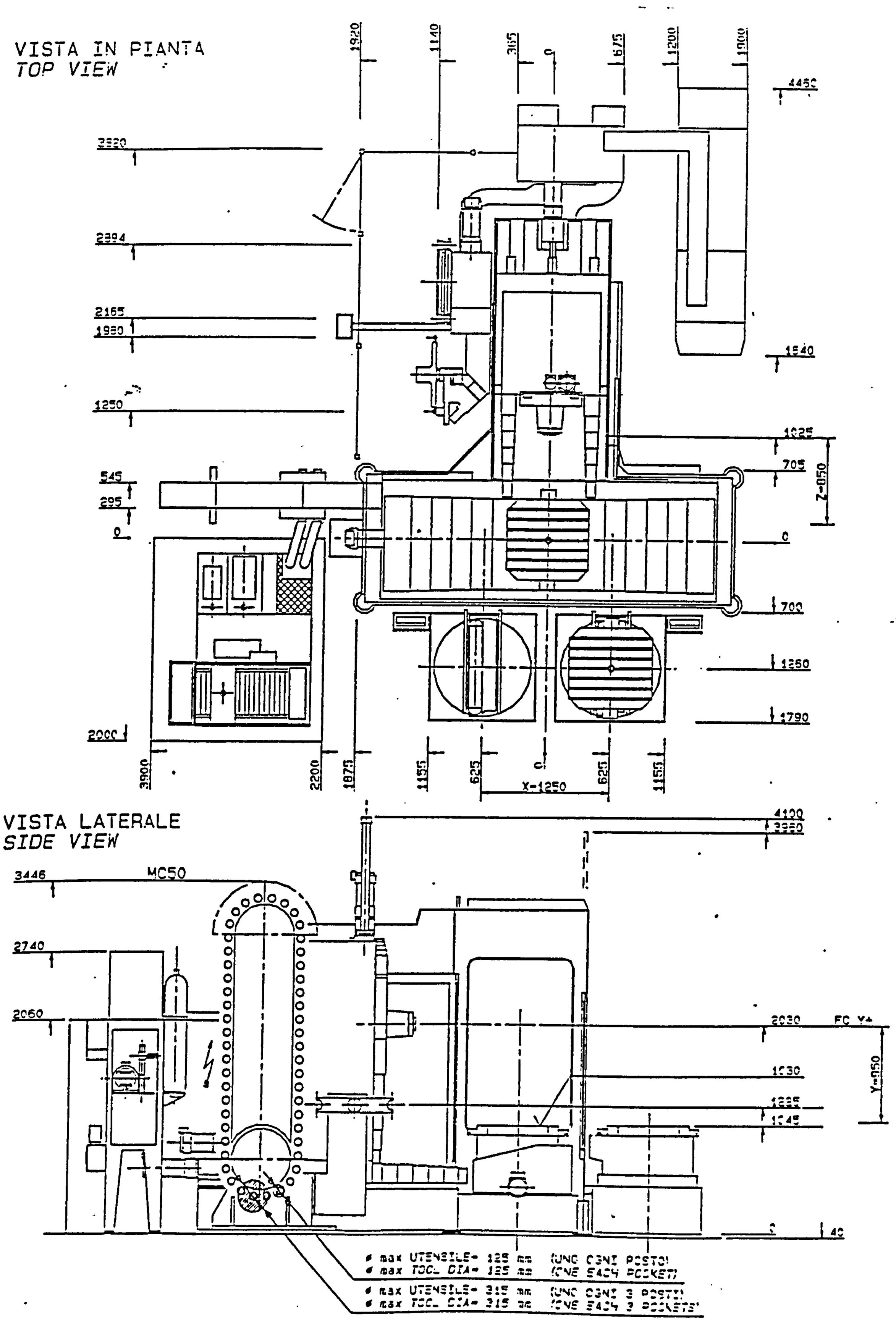

SKETCH N.002

MACHINING CENTRE LAY-OUT

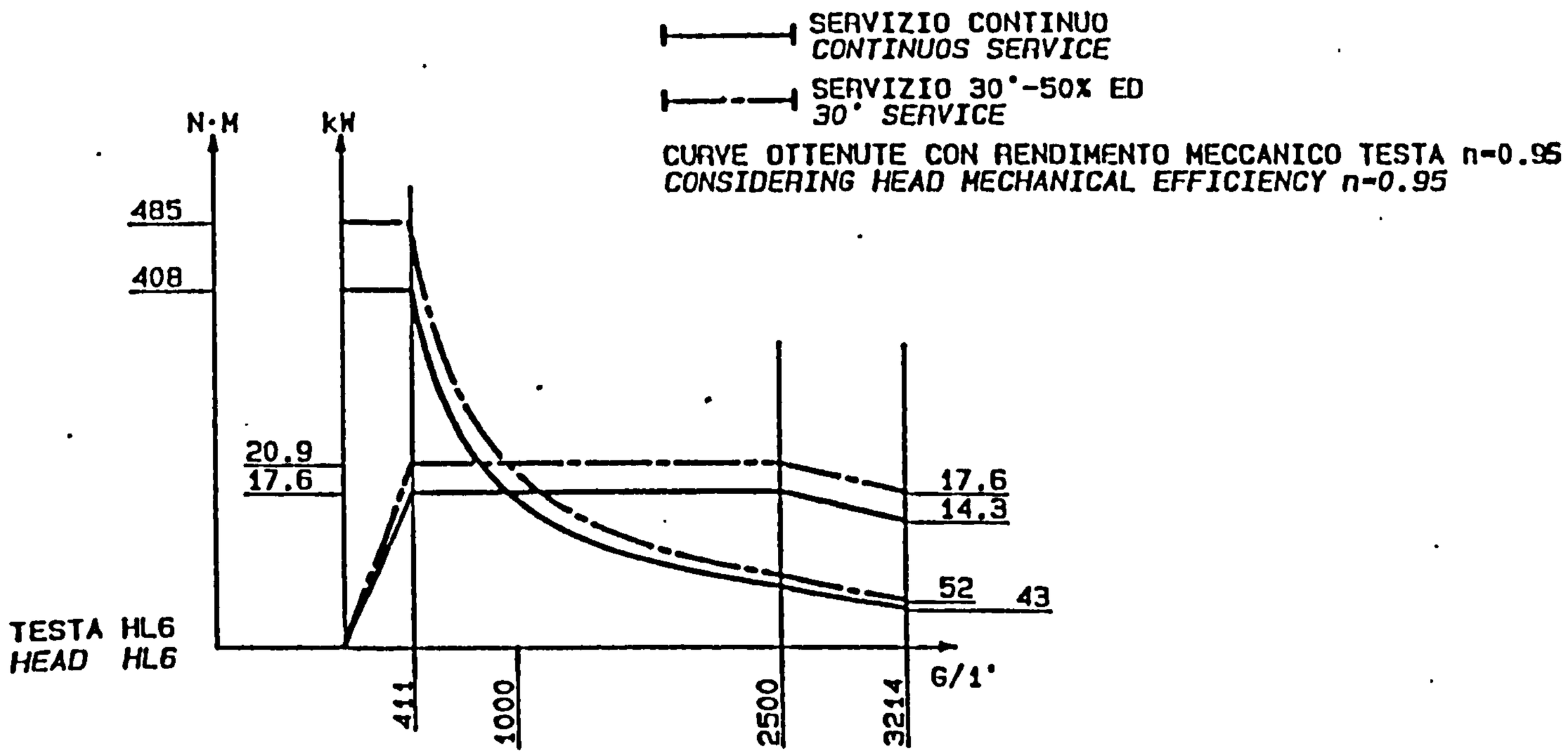

A.C. MOTOR FANUC 18/22 kW

SKETCH N.003

DIAGRAM OF SPINDLE MOTOR OUT-PUT

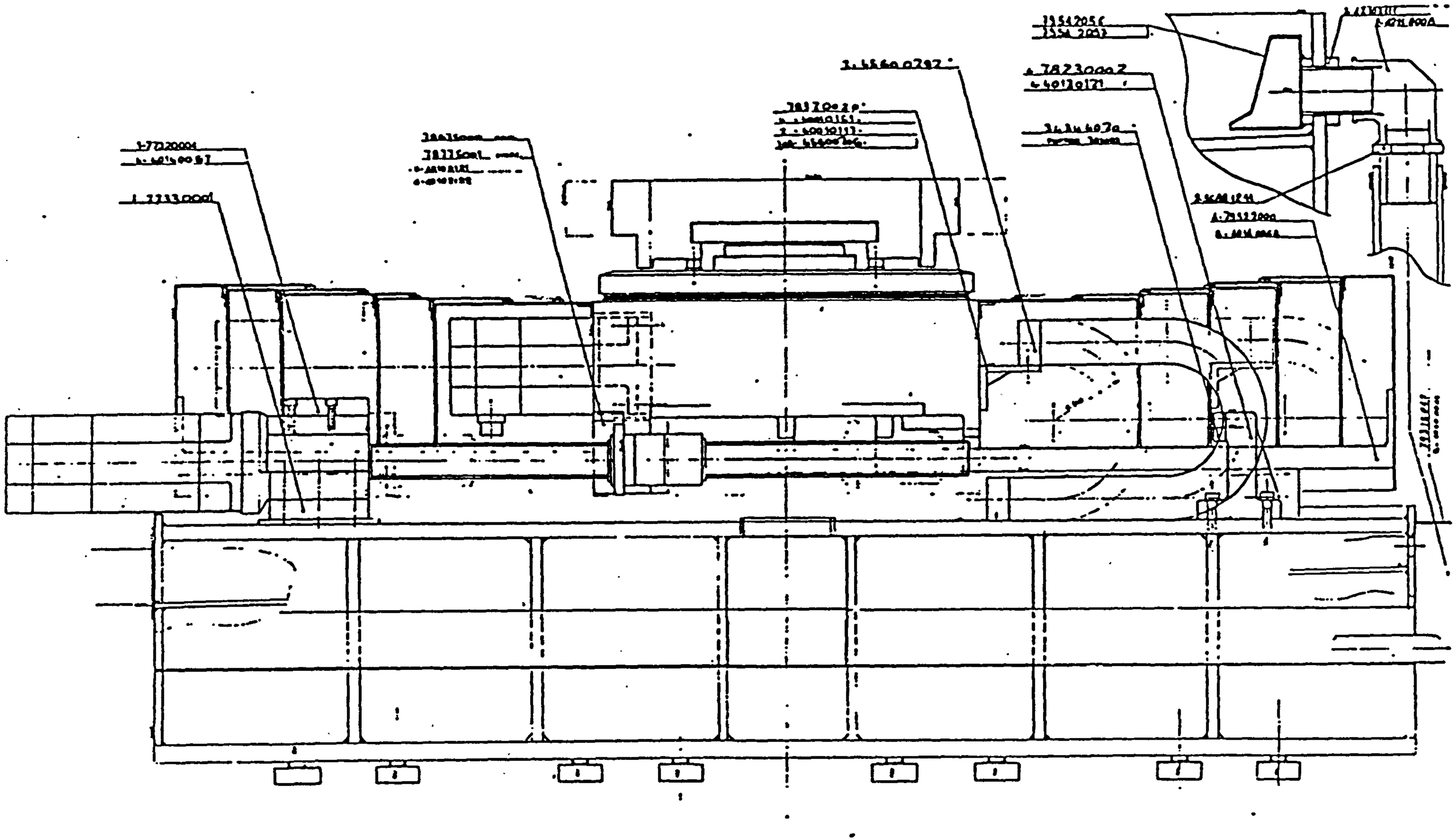

SKETCH N.004

" X " AXIS LONGITUDINAL SECTION

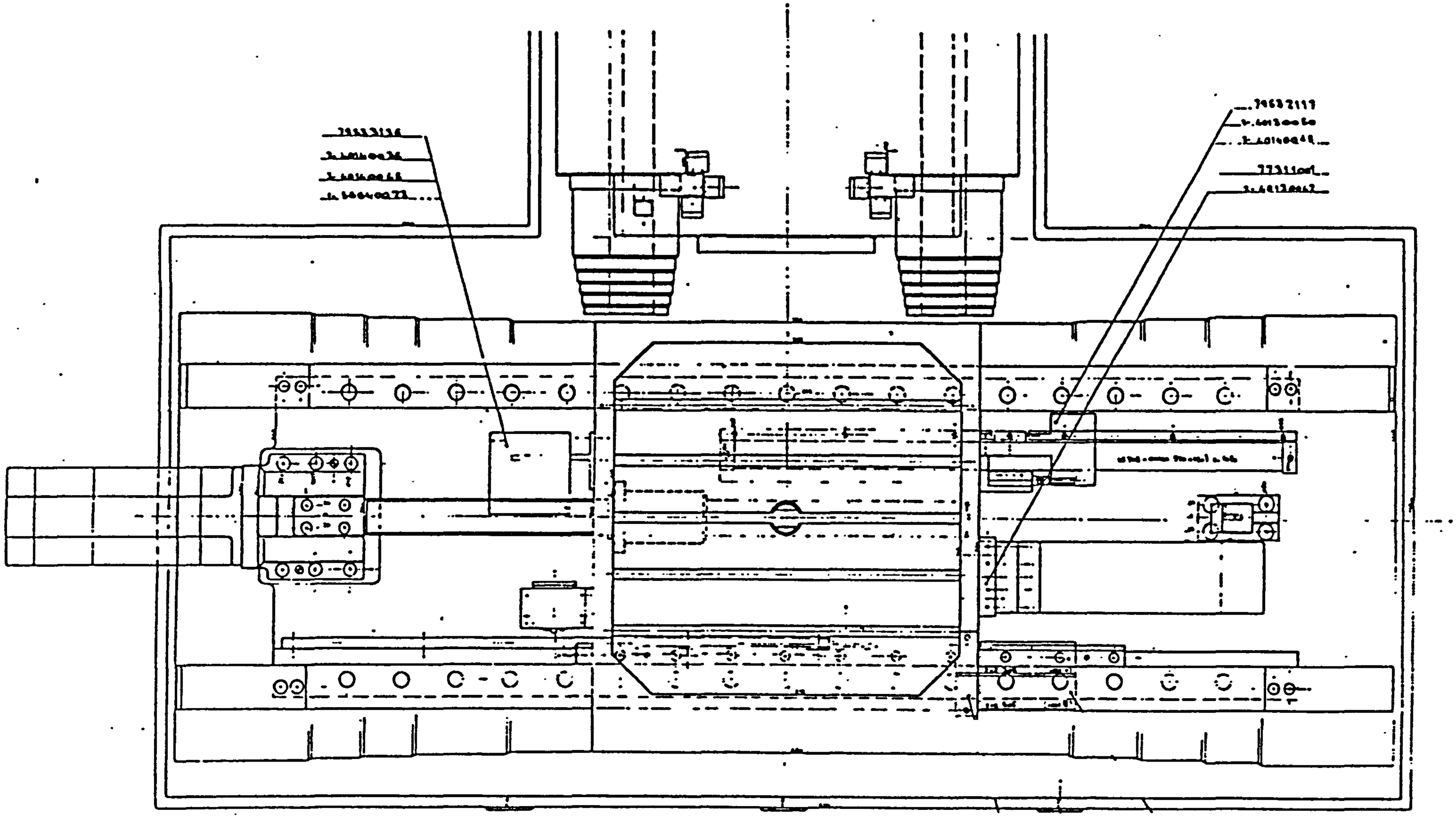

SKETCH N.005

" X " AXIS TOP VIEW

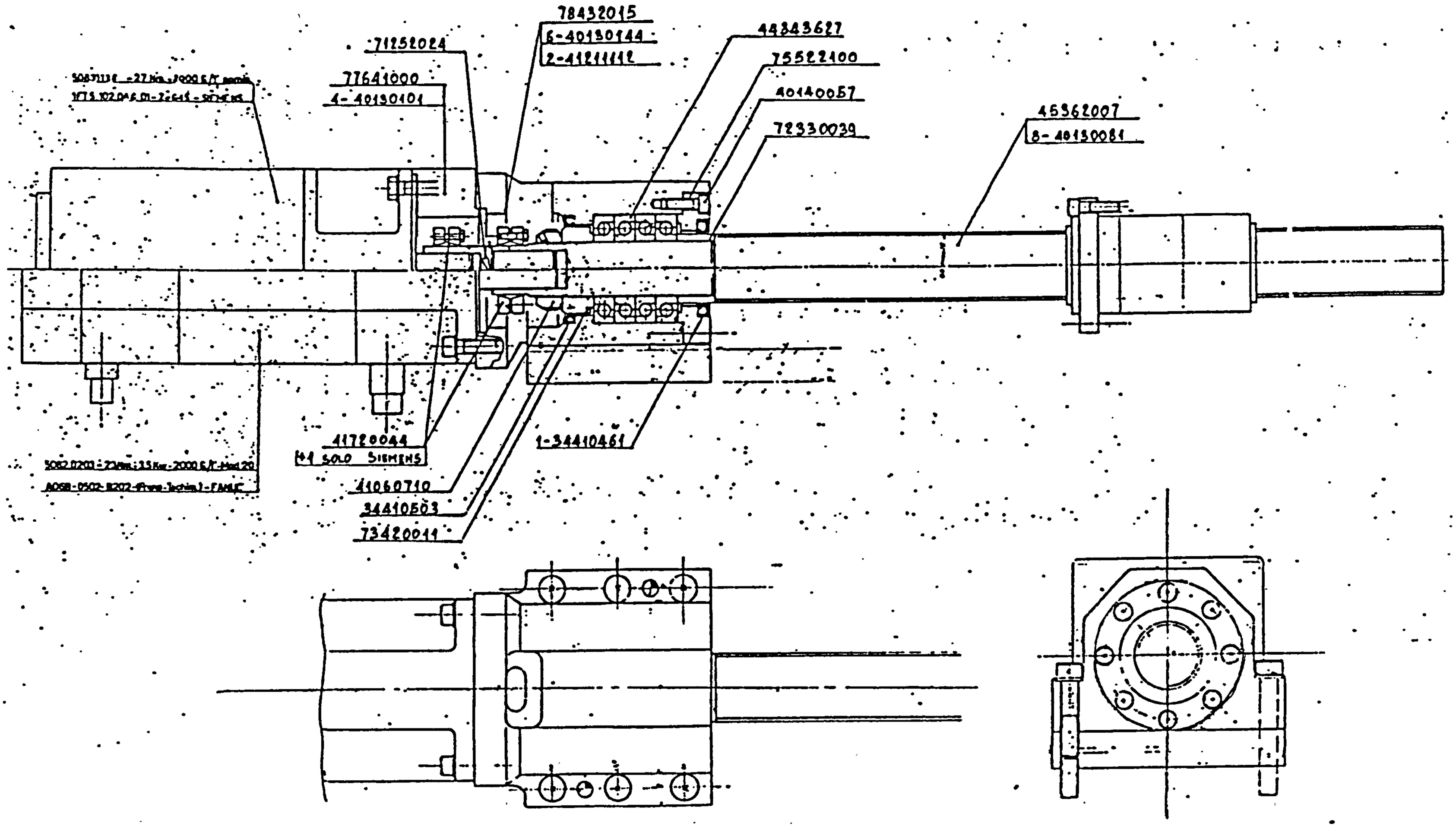

SKETCH N.006

" X - Y - Z " AXES BALL-SCREW SUPPORT

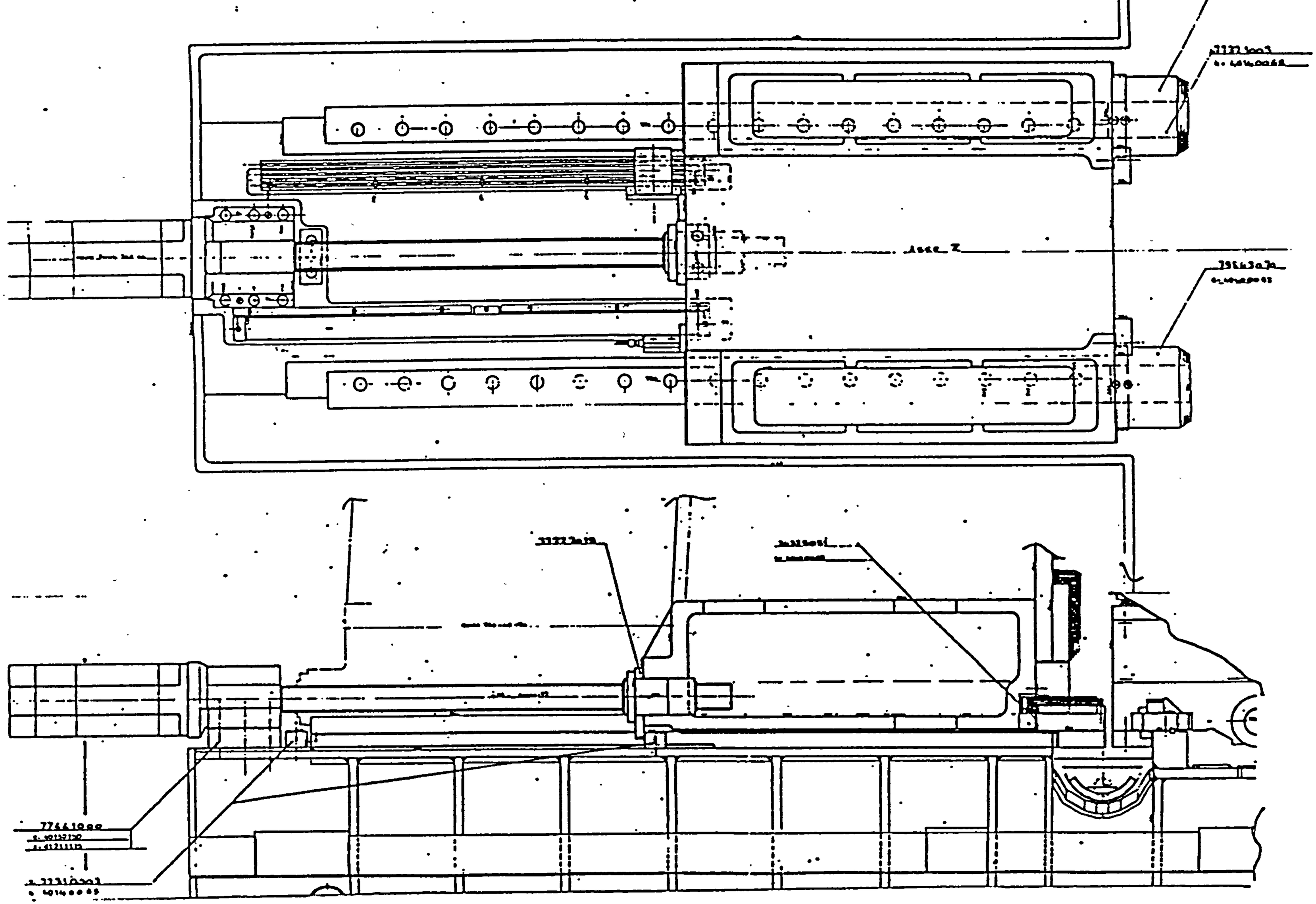

SKETCK N.007

" Z " AXIS TOP VIEW AND LONGITUDINAL SECTION

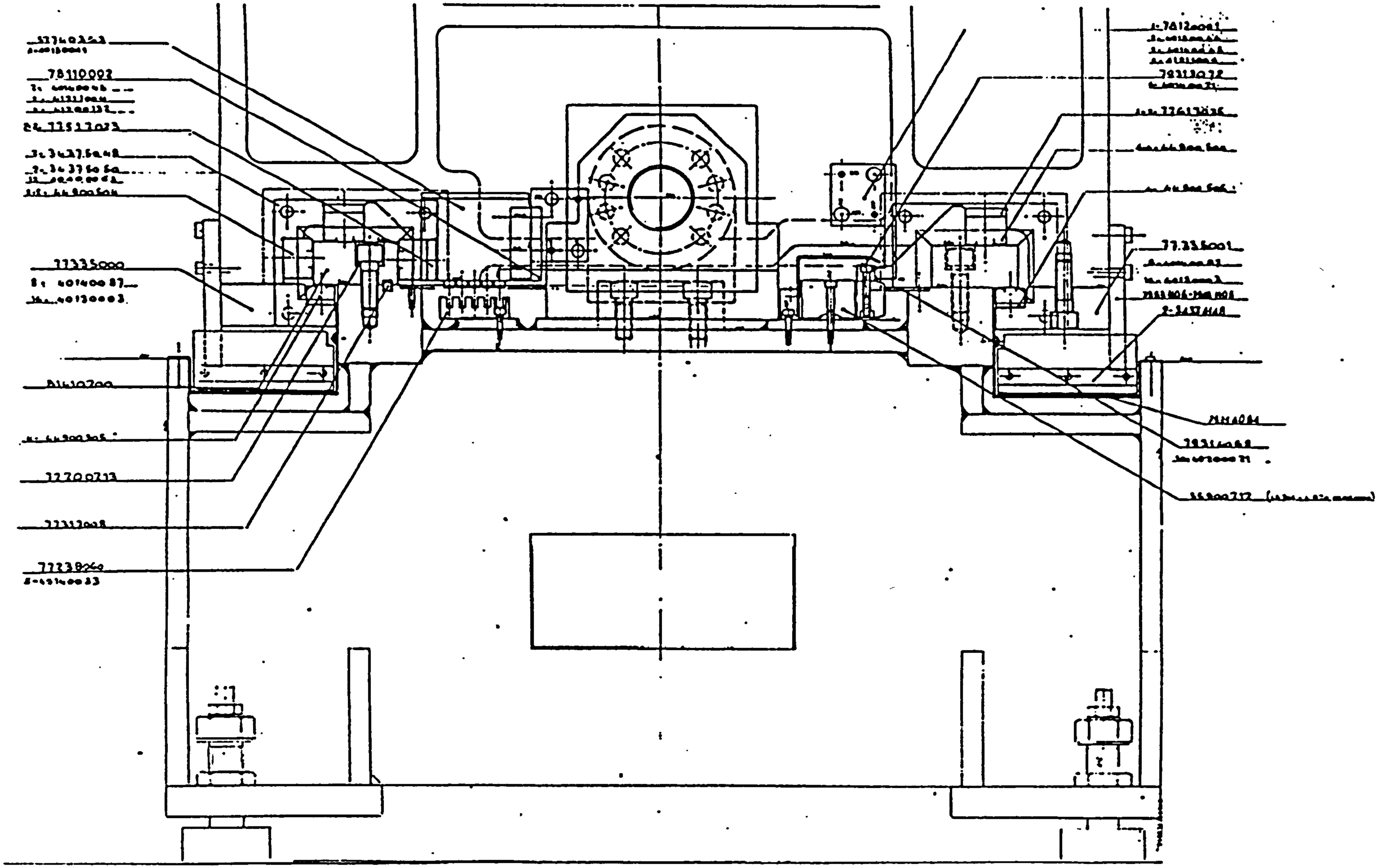

SKETCH N.008

" Z " AXIS CROSS SECTION

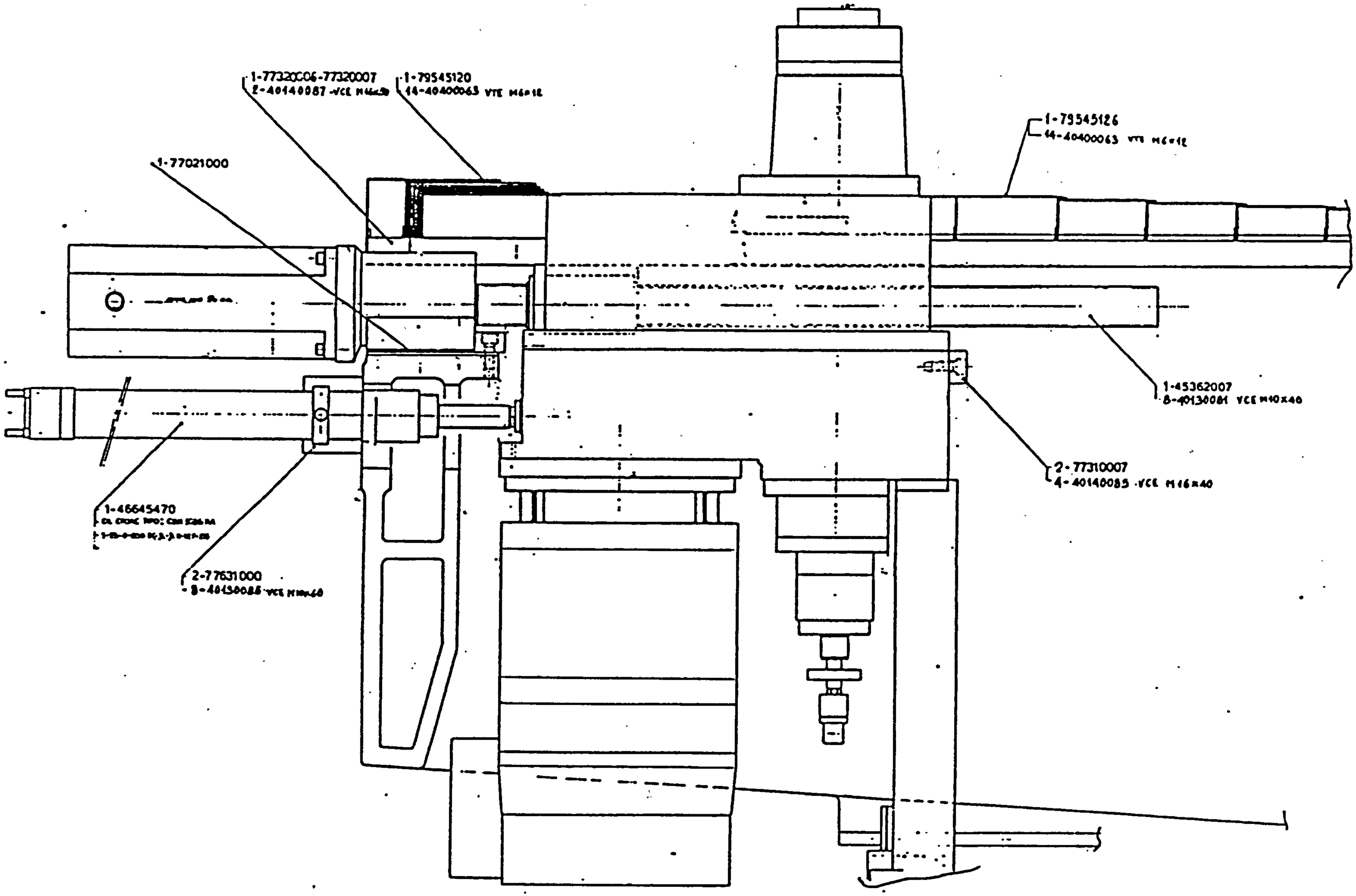

SKETCH N.009

" Y " AXIS SIDE VIEW (CARRIAGE AND SPINDLE HEADSTOCK)

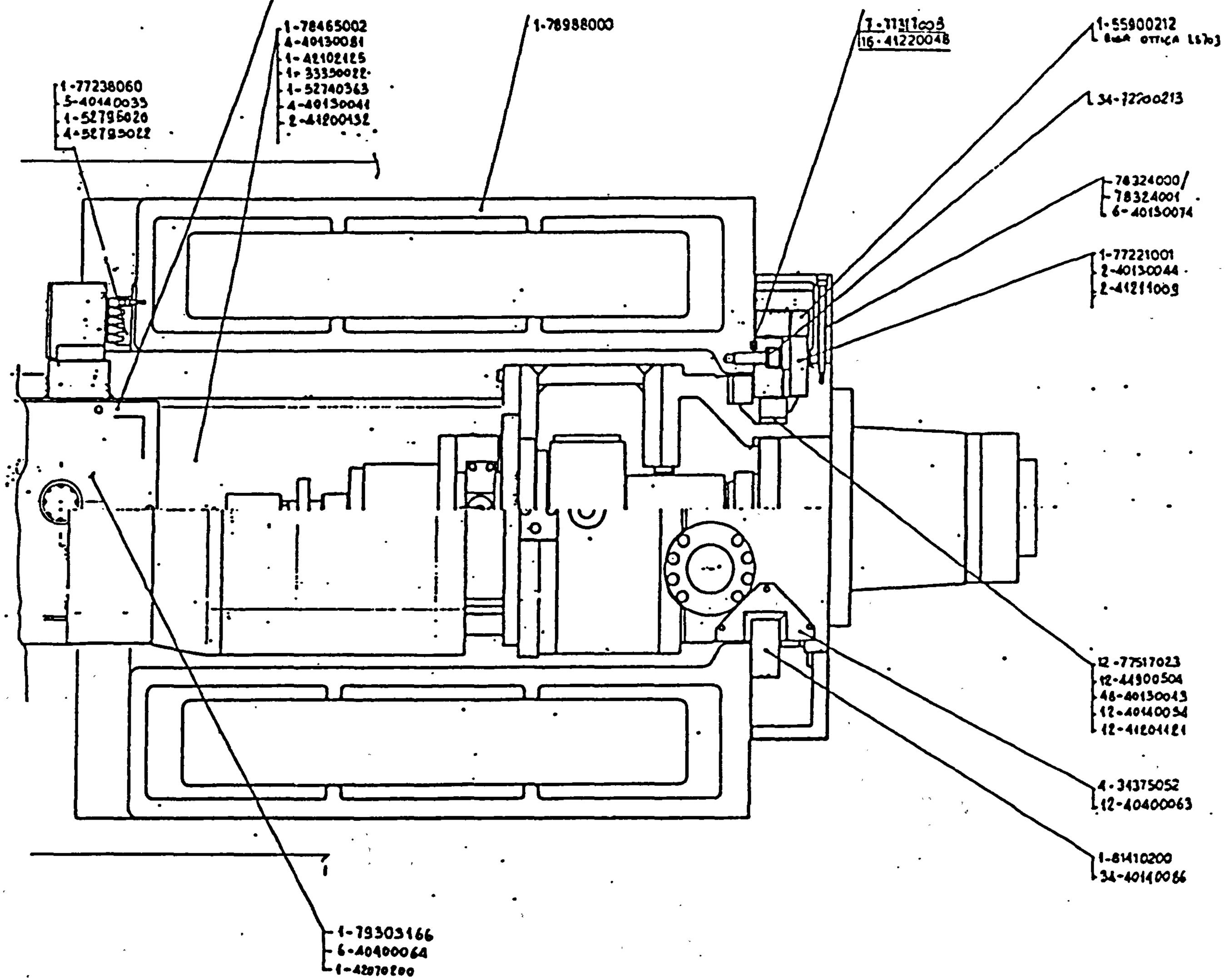

SKETCH N.010

" Y " AXIS TOP VIEW (COLUMN AND SPINDLE HEADSTOCK)

TEXT BOUND INTO

THE SPINE

SKETCH N.013

SPINDLE HEADSTOCK CROSS SECTION

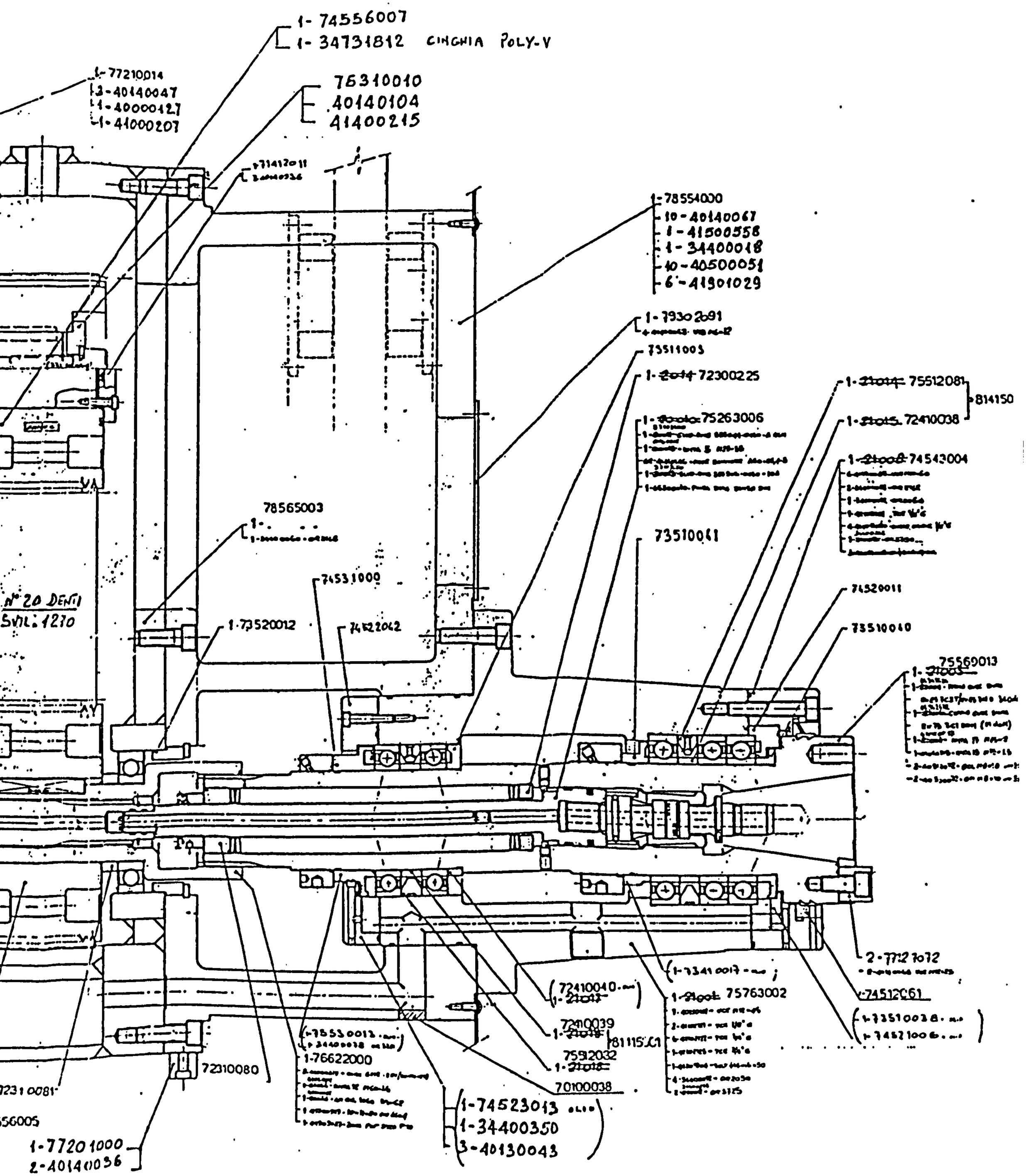

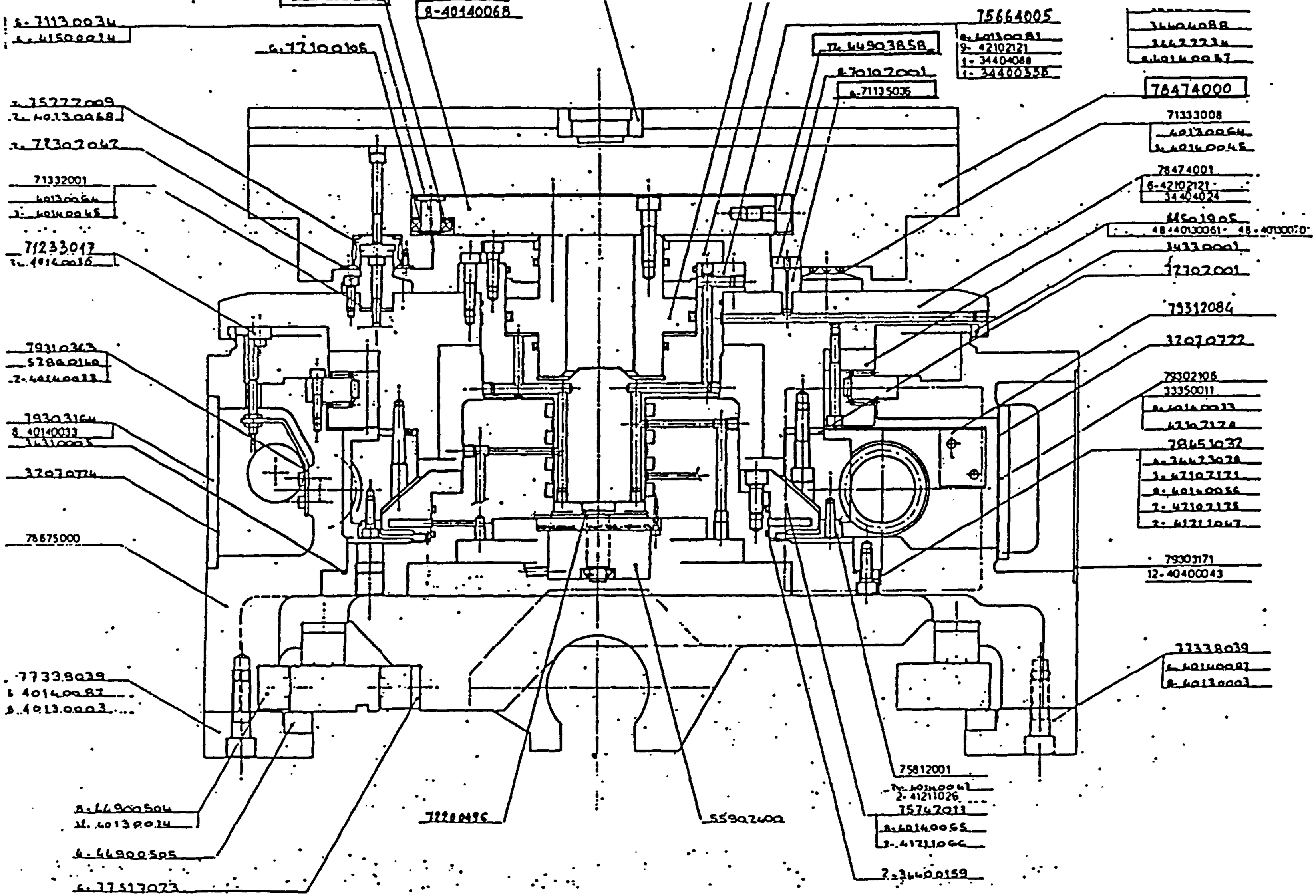

SKETCH N.011

ROTARY TABLE CROSS SECTION

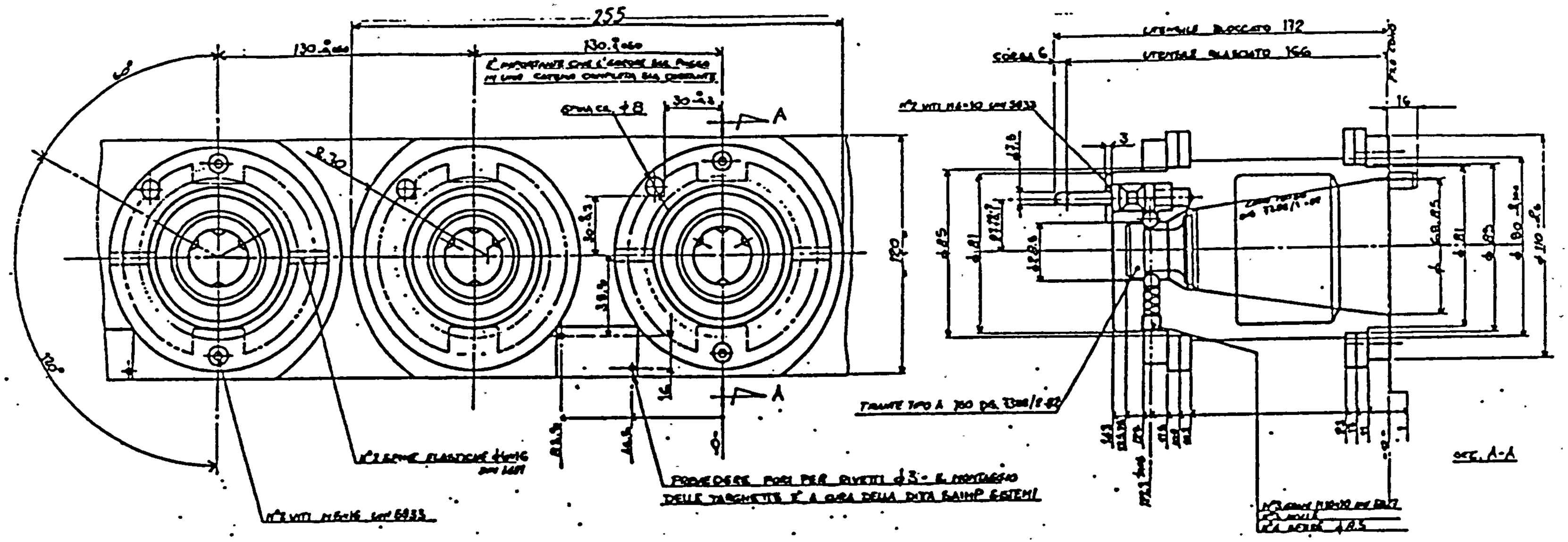

SKETCH N.012

CHAIN LINK VIEW AND TOOL-HOLDER SEAT CROSS SECTION

SKETCH N.013

SPINDLE HEADSTOCK CROSS SECTION

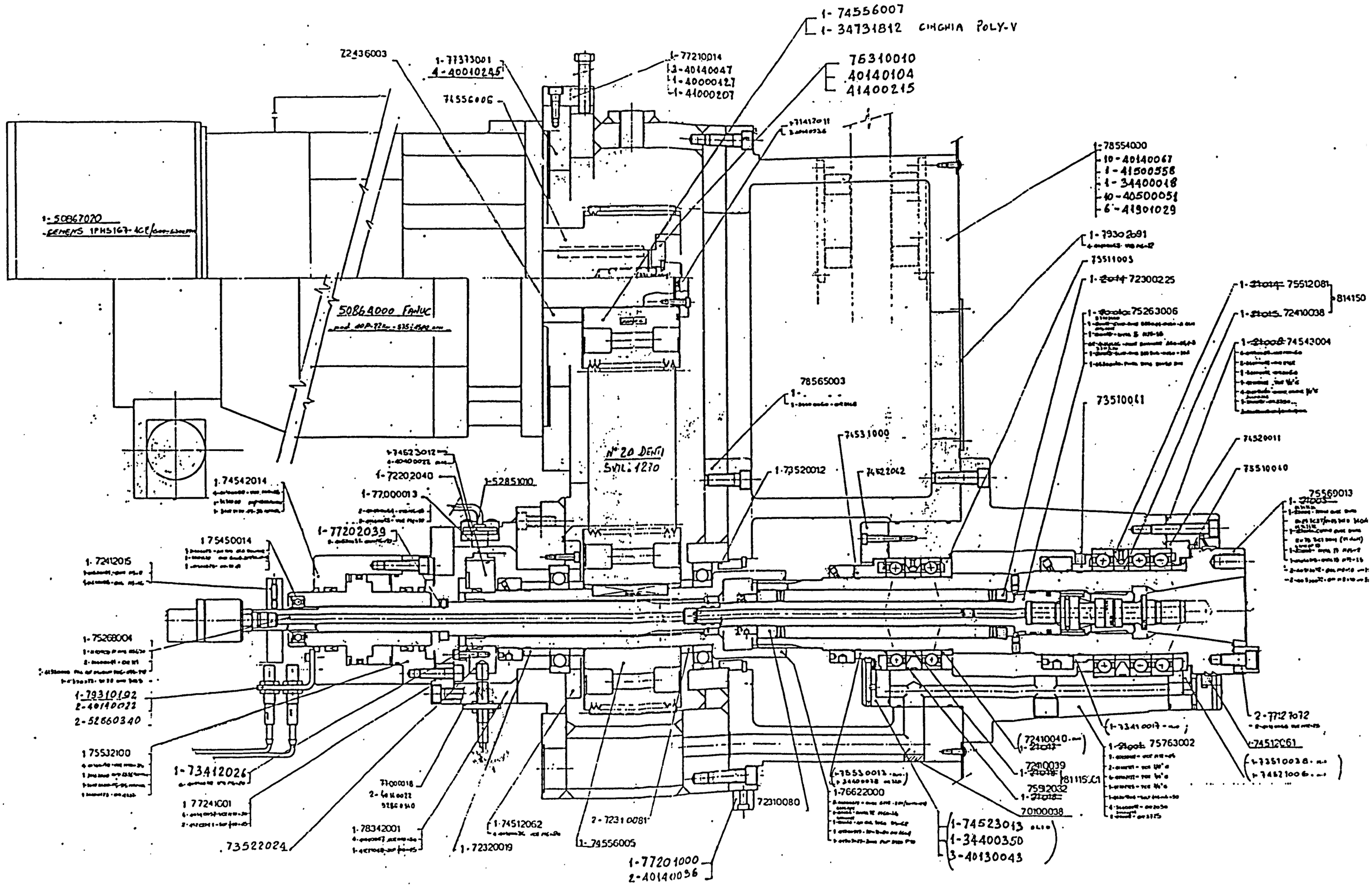

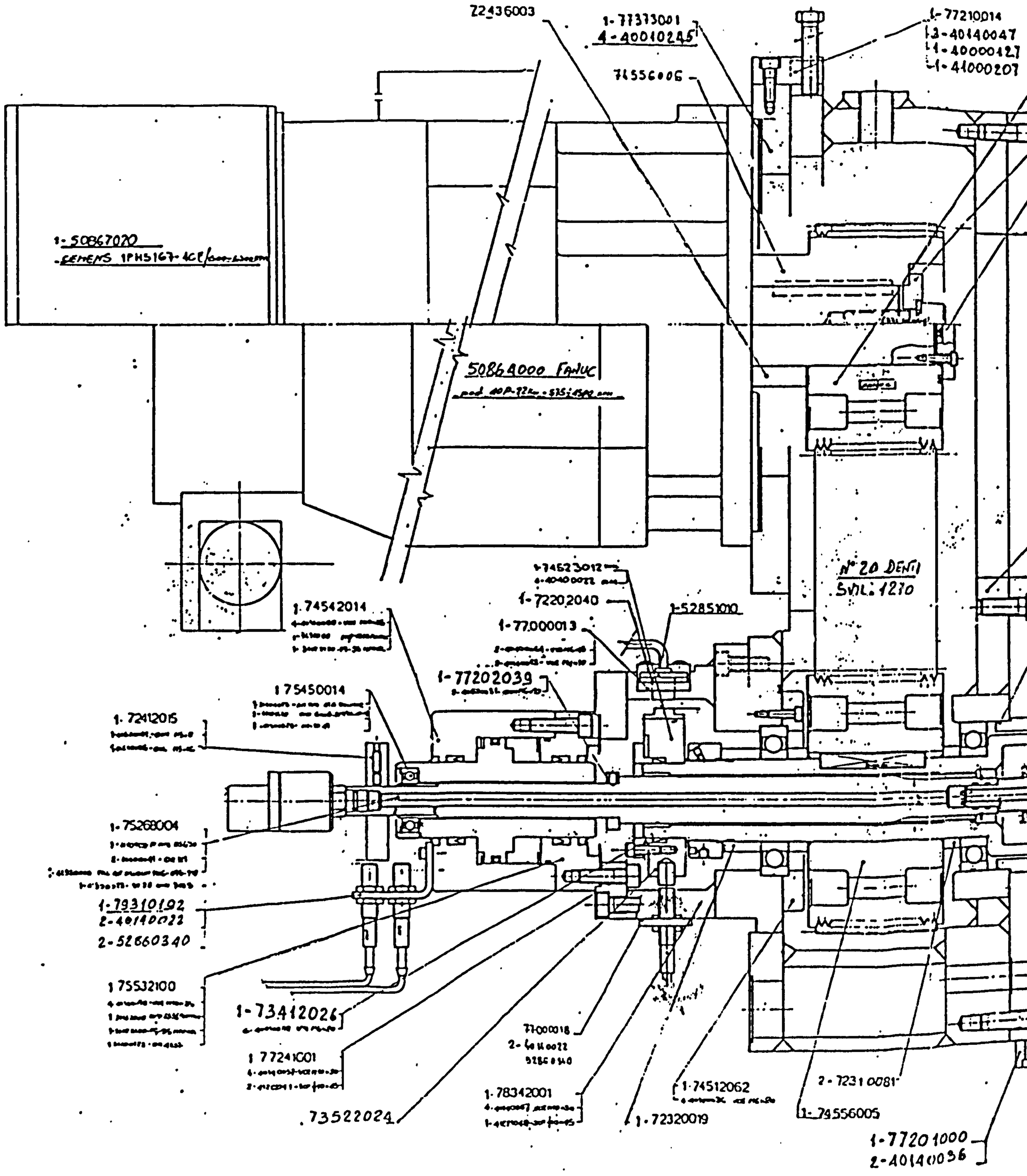
Z2436003
1-77373001
4-40010245
1-77210014
3-40140047
1-40000127
1-41000207
71556006
1-50867020
SIEMENS 1PH5167-4CE
50864000 FANUC
N° 20 DENTI
SVIL. 1210
1-74523012
1-72202040
1-52851010
1-77000013
1-77202039
1-74542014
1-75450014
1-7241205
1-75268004
1-79310192
2-40140022
2-52660340
1-75532100
1-73412026
1-77241001
73522024
77000018
2-40140022
52860340
1-78342001
1-72320019
1-74512062
2-72310081
1-74556005
1-77201000
2-40140036

SKETCH N.013

SPINDLE HEADSTOCK CROSS SECTION

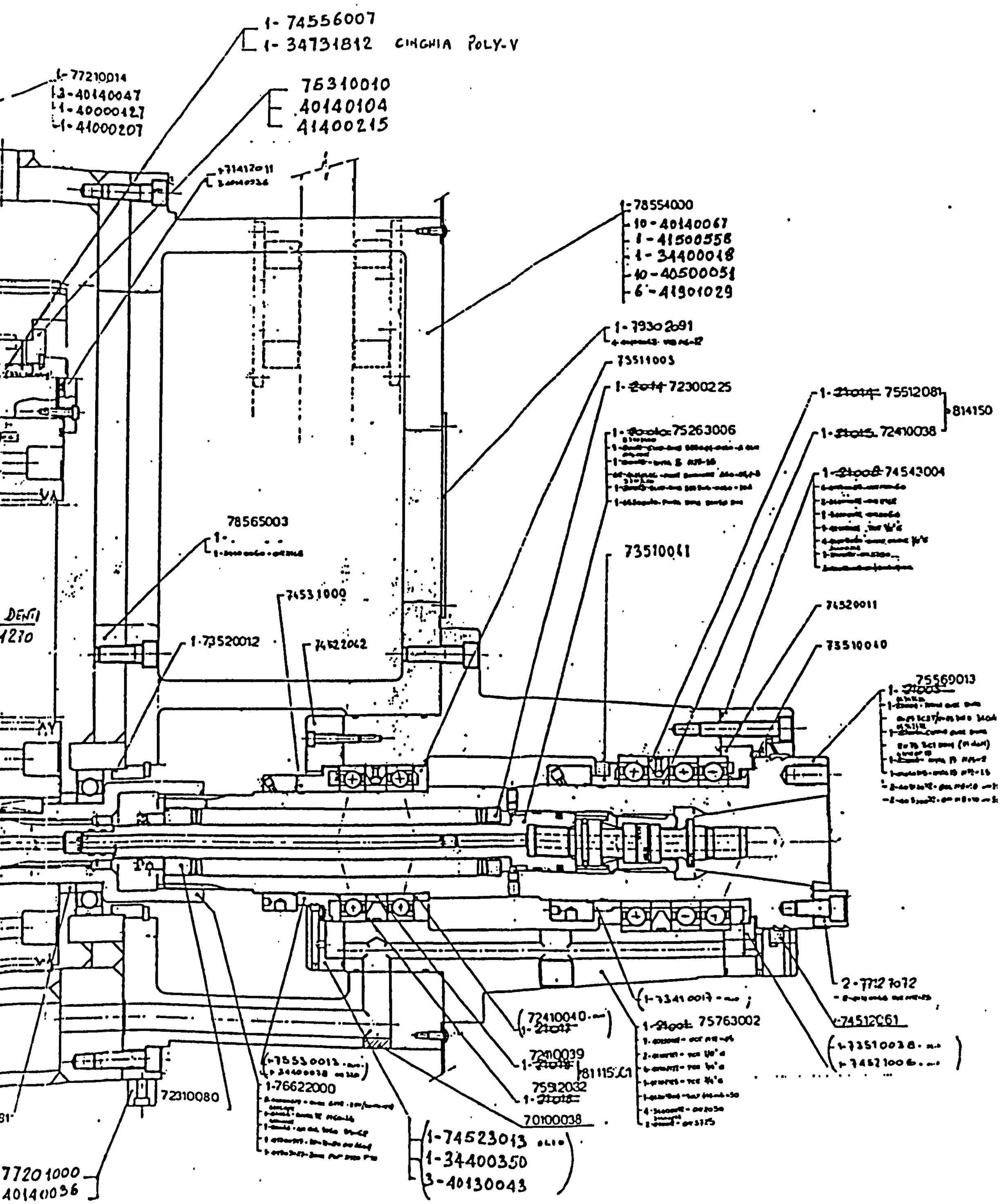

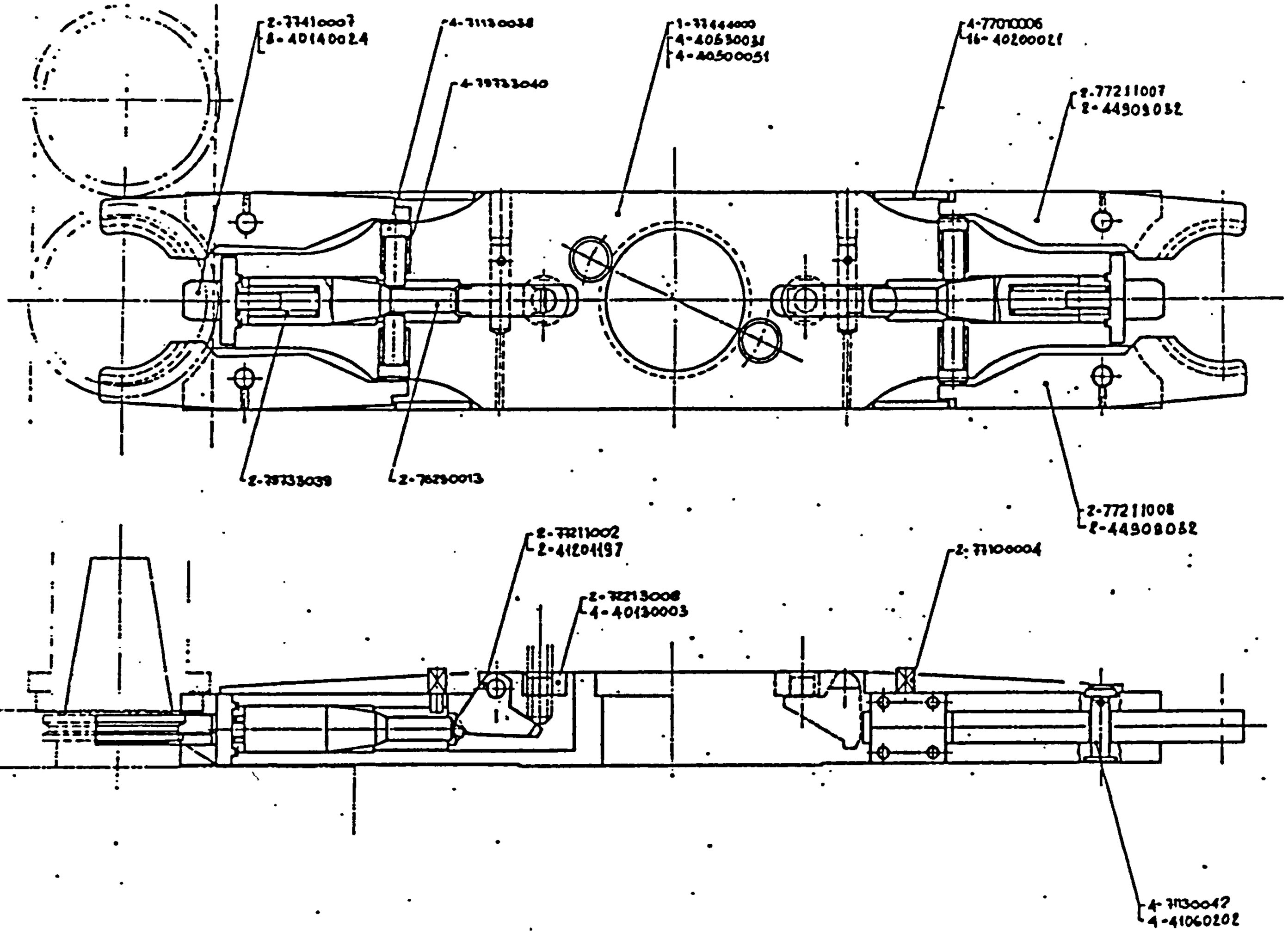

SKETCH N.014

TOOL-CHANGER CLAMPING ARM

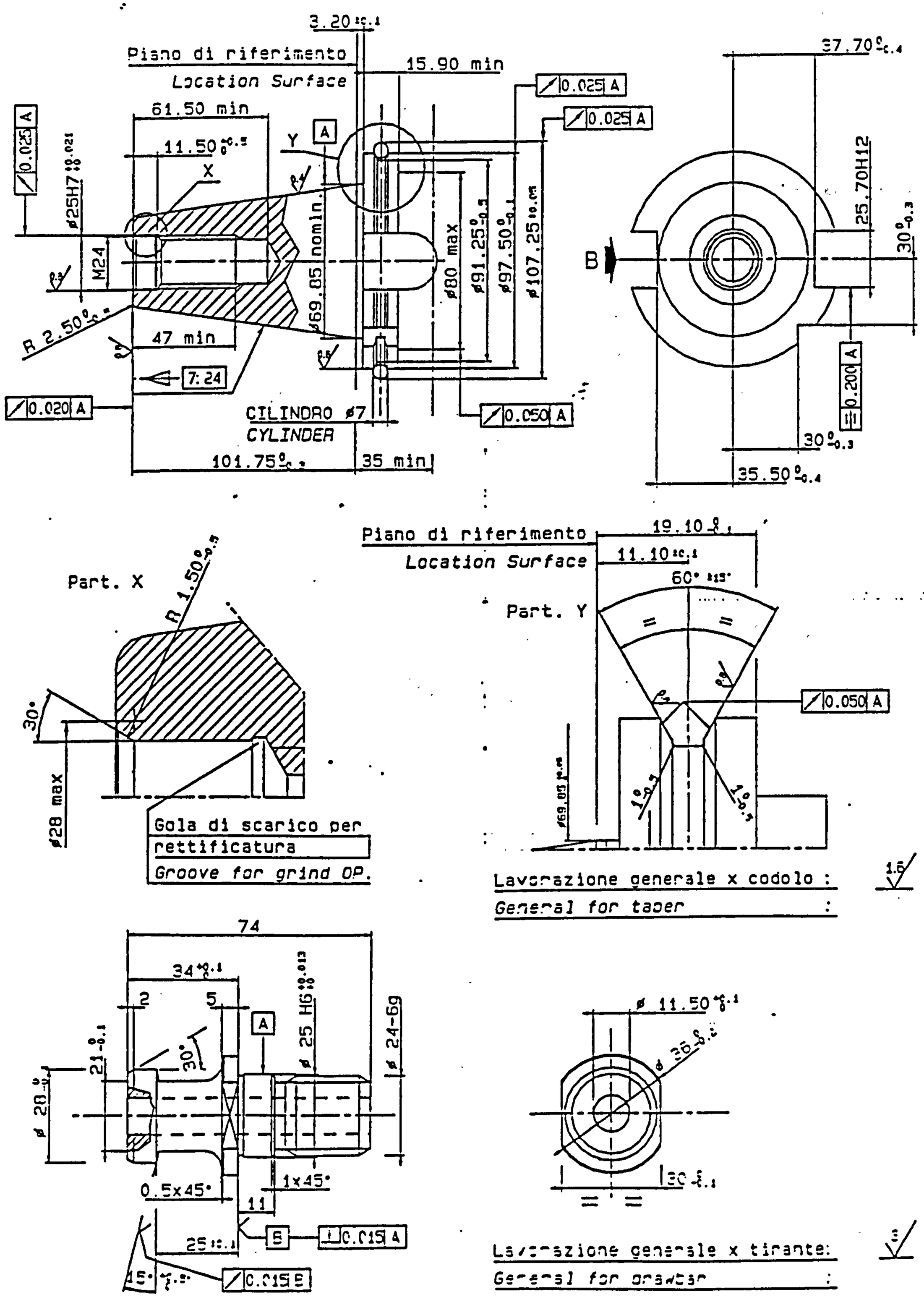

SKETCH N.015

TOOL-HOLDER ISO 50 AND DRAWBAR

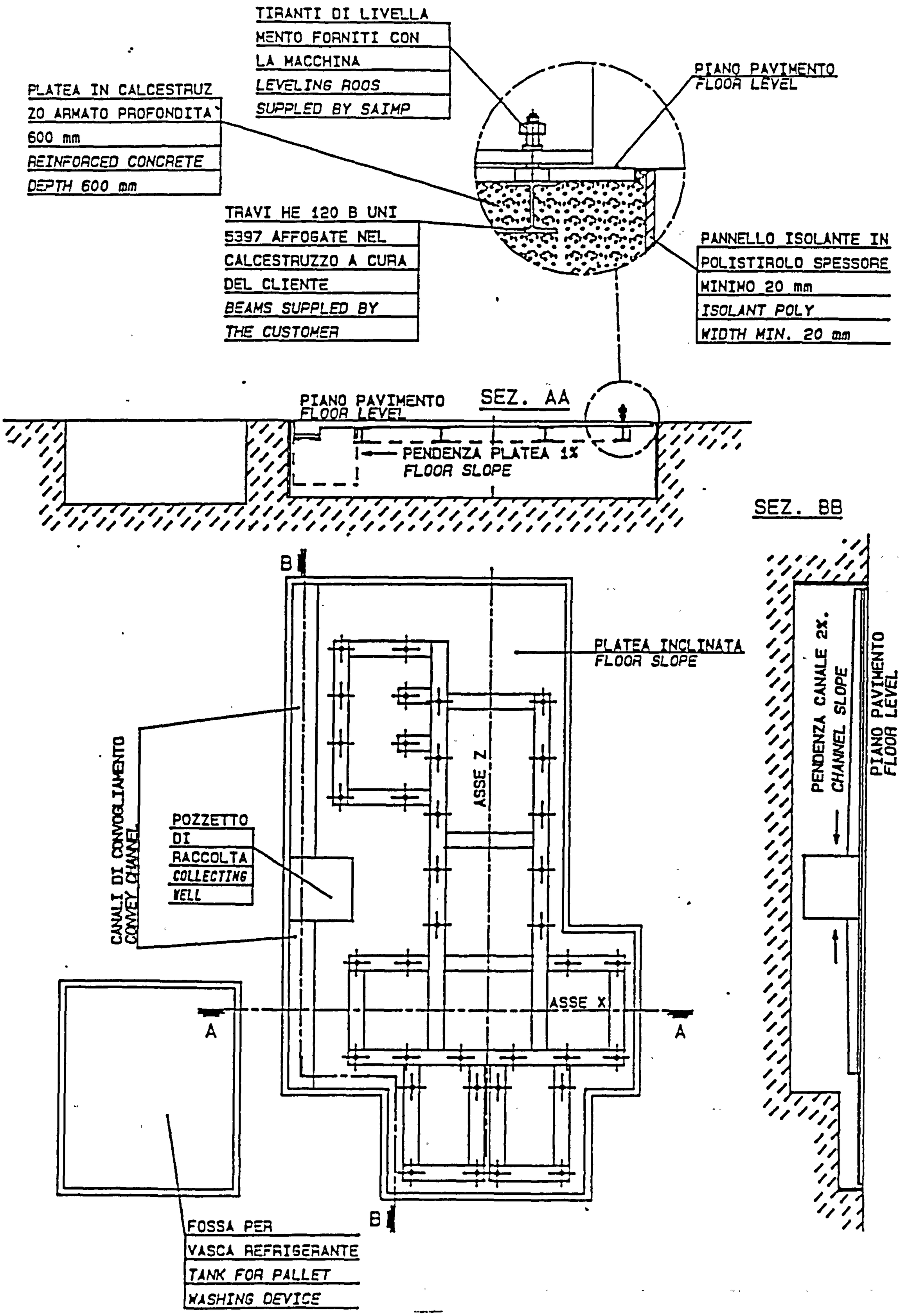

SKETCH N.016

INDICATIVE FOUNDATION PLAN

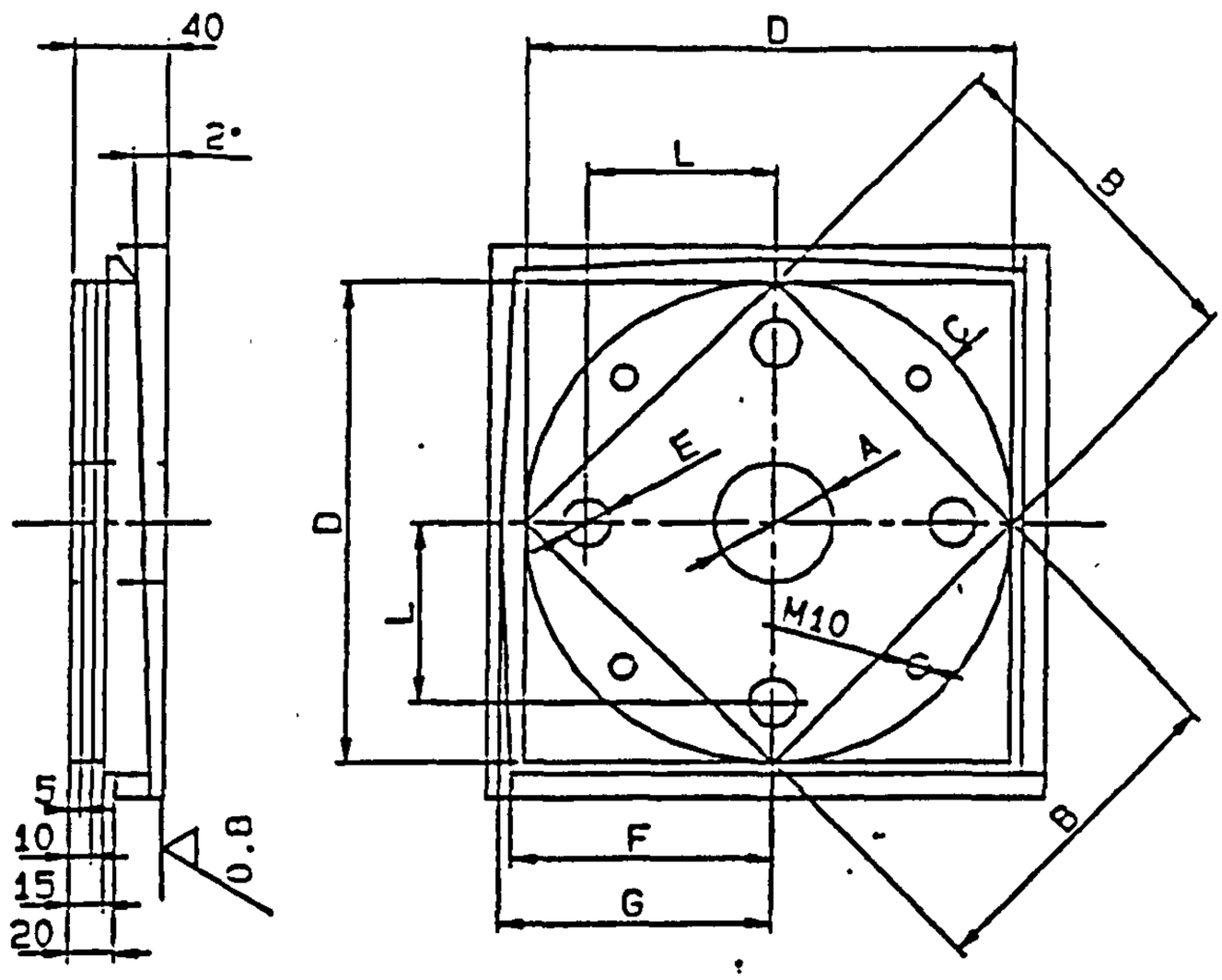

OGGETTO DELLA MISURA *TESTED VALUES*		ERRORI/*ERROR*	
		TOLLERATI *TOLLERANCE*	CONSTATATI *TESTED*
ROTONDITA' *ROUDNESS*	C	0.030	
CONCENCITRITA' *CONCENTRICITY*	A-C	0.030	
PARALLELEISMO LATI *PARALLEL SIDE*	D-D	0.020	
PARALLELISMO LATI *PARALLEL SIDE*	B-B	0.025	
QUADRATURA LATI *QUADRATURE SIDE*	D-D	0.020	
QUADRATURA LATI *QUADRATURE SIDE*	B-B	0.025	
INCLINAZIONE *INCLINATION*	2°	0.030	
INTERASSI *CENTRE TO CENTRE*	L	±0.015	
RUGOSITA' *ROUGHNESS*	RA	0.9	

OSSERVAZIONI/*NOTES*		
VALORI DI MASSIMA *INDICATIVE VALUES*	A=ø50	C=ø200
	E=ø20	B=141.4
	D=200	F=105
	G=110	L=75

SKETCH N.017

MACHINE TESTING SHEET N.A.S. TEST

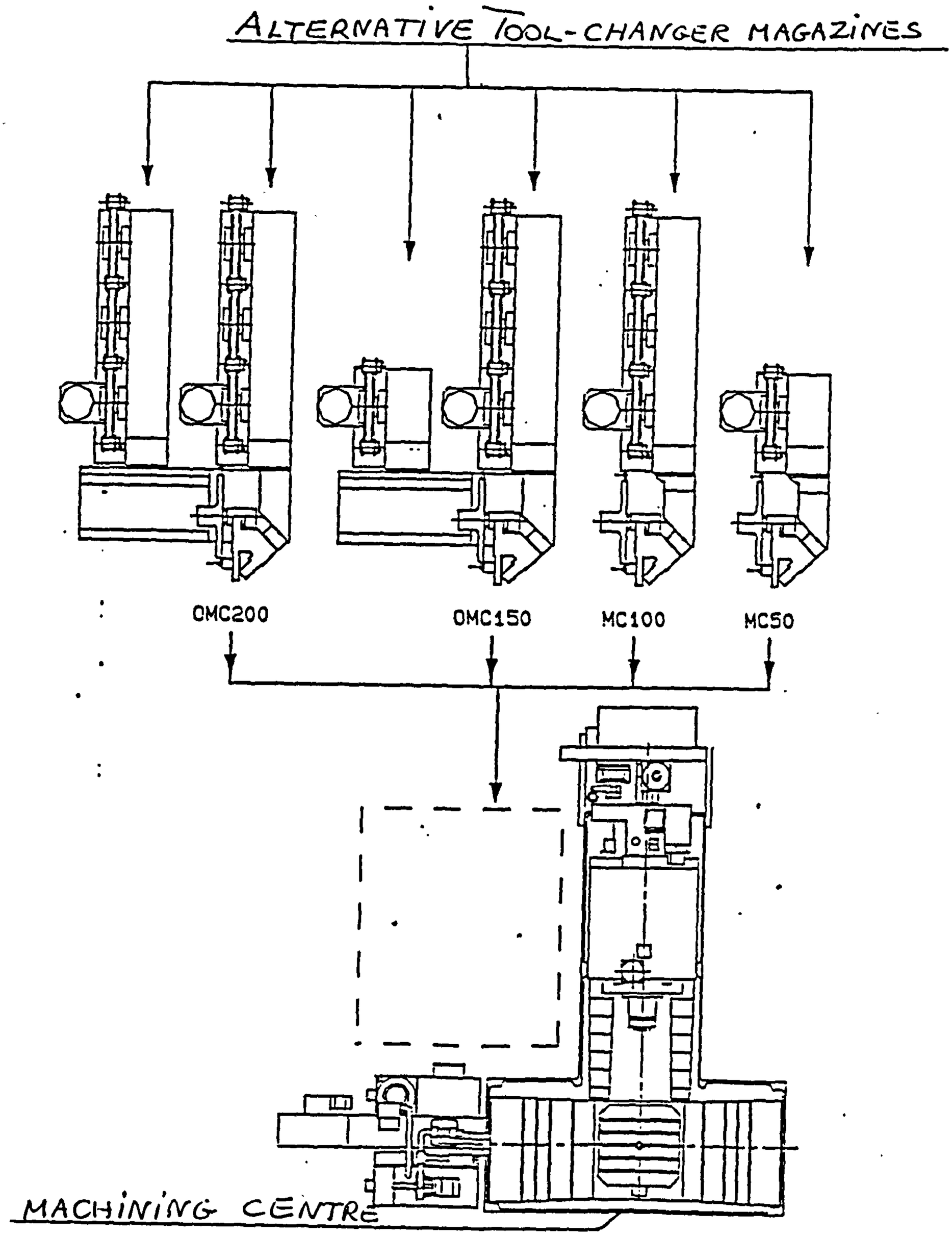

SKETCH N.018

ALTERNATIVE TOOL MAGAZINES

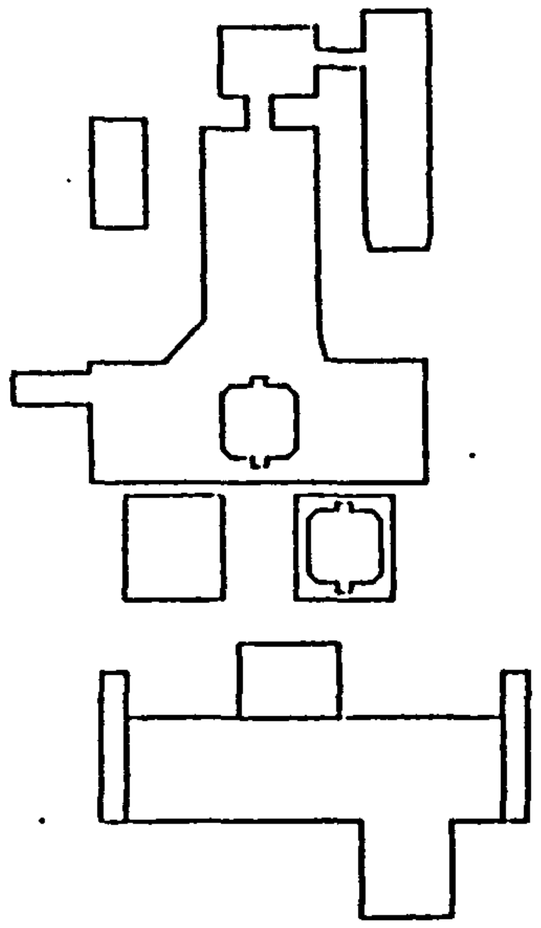

STAND ALONE APPLICATION
READY FOR FMC EXPANSION

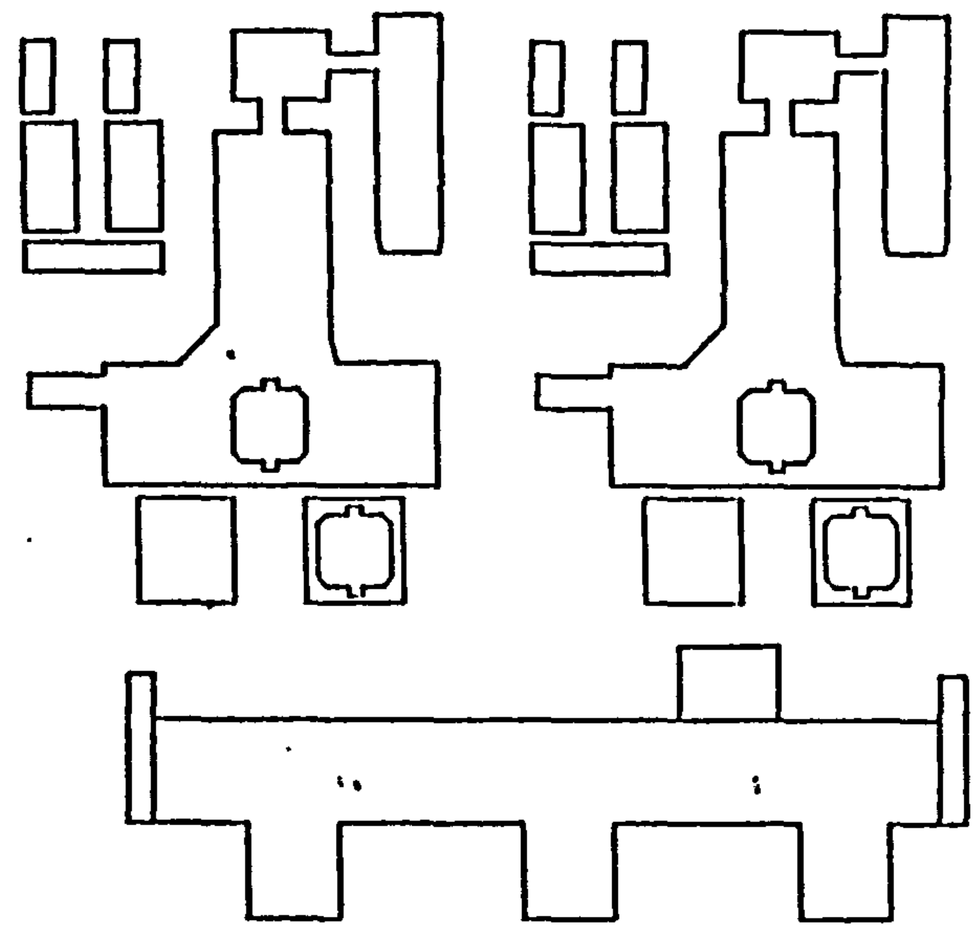

FLEXIBLE MANUFACTURING CELL

SKETCH N.019

FMC BASIC CONFIGURATION

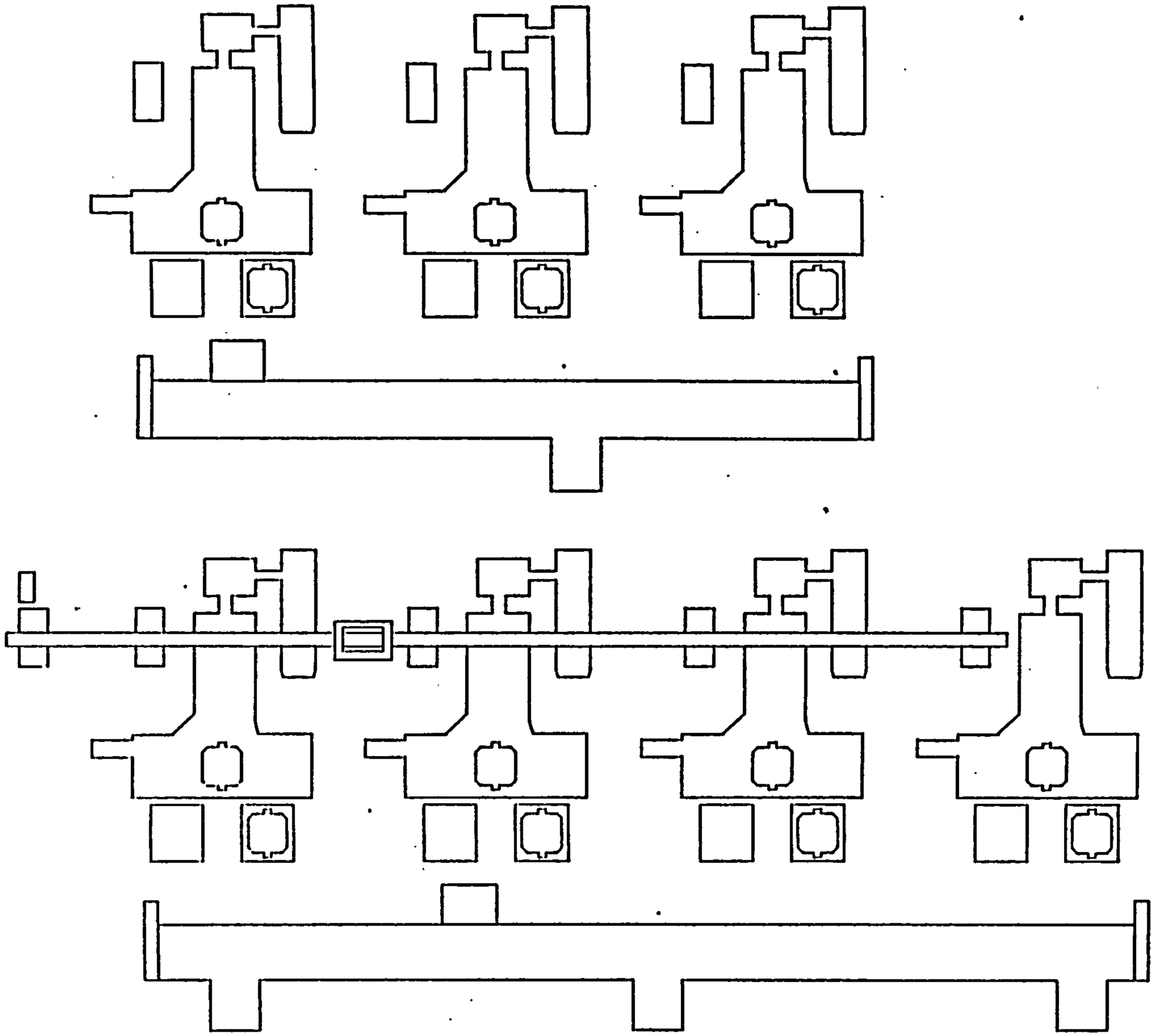

SKETCH N.020

FMC EXPANSION

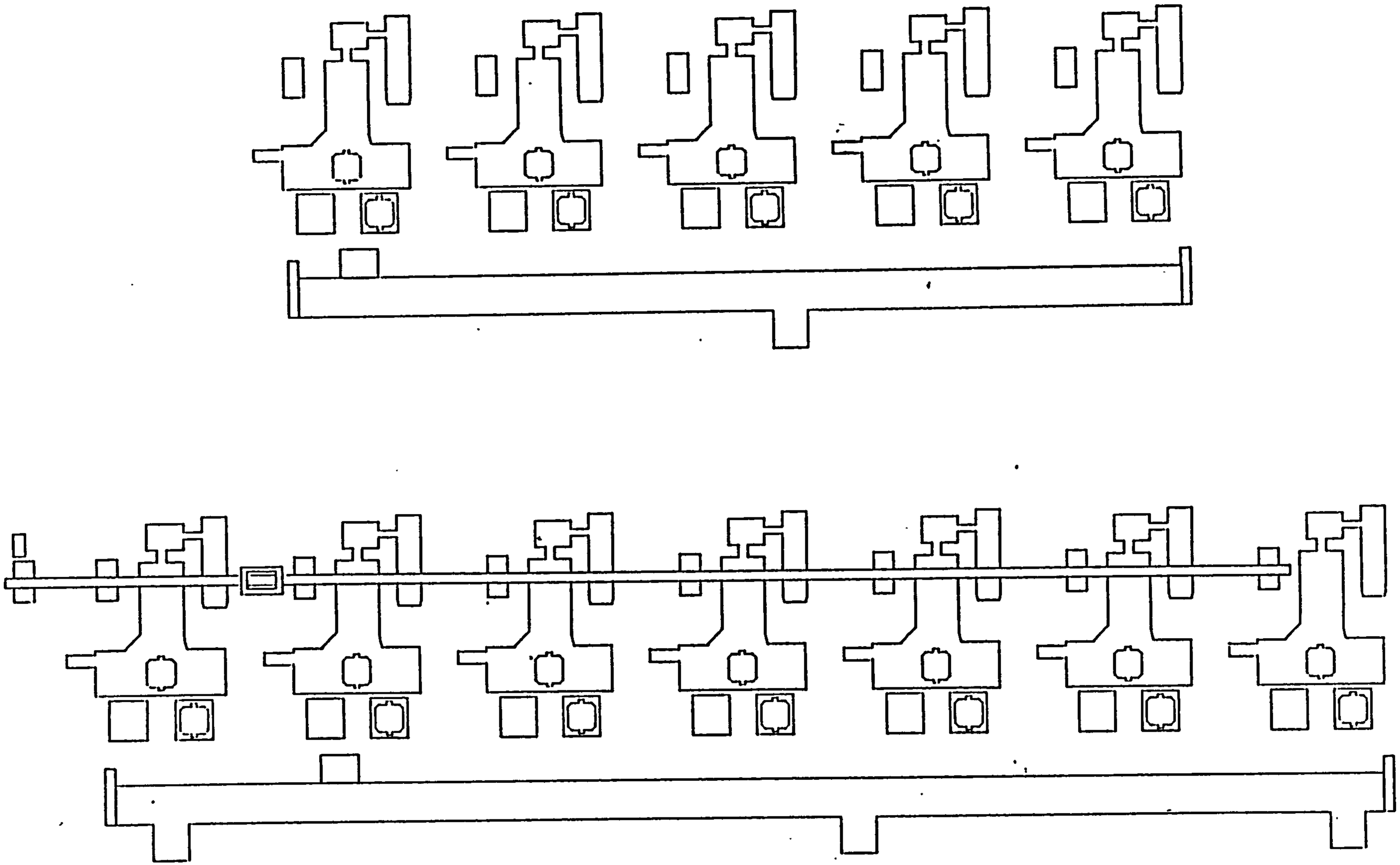

SKETCH N.021

FMC FURTHER EXPANSION

DFD CHARTS

Relationship
- ● Strong
- ◒ Medium
- ○ Weak

		NUMBER OF MACHINING CENTRES						DIN 55201					TOOL SIZE			TOOL CHAIN MAGAZINES					PALLET MOTION CONTROL		PALLET TRANSPORTATION				MACHINE AXIS									MACHINE STRUCTURE			CNC SUPPLIER												COMMUNICATION LINKS				SOFT WARE		CELL CONTROL HW
								SIZE 1				SIZE 2															SPINDLE AXIS						FEED BACK						AB						FANUC														
		LAYOUT/DESIGN						PALLET SIZES								SINGLE CHAIN		COMBINED TOOL CHAIN																																								
		FMC		FMS				630x630	630x800	800x800	800x1000	1000x1000	ISO 40	ISO 45	ISO 50	50	100	150	200	TOOL ROOM	MANUAL	AUTOMATIC	AGV	VEHICLE ON RAILS	RIGID TRANSFER	VERTICAL RAIL SHUTTLE	CARTRIDGE PULLEY TRANS.	SOLID SPINDLE NOSE IN BOLT	GEAR BOX	X-Y-Z SAME STROKE	X-Y-Z DIFFERENT STROKE	DIRECT TRANSMISSION	GEAR DRIVEN	RESOLVER	ENCODER	OPTICAL SCALES	MATERIALS	SAFETY, CHIPS AND COOLANT	MOTORS	MOTORS	FEEDBACK UNITS	PLC	DRIVERS	CNC	CELL CONTROLLER	MOTORS	FEEDBACK UNITS	PLC	CNC	DRIVERS	CELL CONTROLLER	MRP	MRP II	OTHER CELL CONTROLLER	I/Q AVAILABILITY	FRIENDLY	MODULAR	CELL CONTROL HW
		1	2	3	4	5	6																																																				
DESIGN TO COST	MARKET POTENTIAL												DIFFERENT FROM COUNTRY TO COUNTRY																																															
	MARKET SHARE												DESIGN AND COMPANY MARKET STRATEGY																																															
	PRODUCTION BATCH SIZES																																																											
	MAKE OR BUY POLICY							●	●	●	●				●		●	●	●	●			●	●	●	●	●	●	ALL PURCHASE																						○	○	○	○	●	●	
	SOFTWARE LANGUAGE DEVELOPMENT																																																										●
	TRAINING																																																										
	SERVICE ORGANIZATION	●	●	●	●	●																																	●	●	●	●	●	●	●	●	●	●	●	●								
DESIGN FOR MANUFACTURE	DESIGN IN RELATION TO MANF. FACILITIES	●	●	●	●	●		◒	◒	◒	◒	◒	◒	◒			●	●	●	●			●	●	●	●	●	●	●	●	ALL PURCHASE																										
	PRODUCTION LEAD TIMES	●	●	●	●	●																																	●	●	●	●	●	●	●	●	●	●	●	●						●		
	VALUE OF WIP JUST IN TIME POLICY	●	●	●	●	●																																	●	●	●	●	●	●	●	●	●	●	●	●								
LEGAL AND FINANCIAL	COMPLIANCE WITH HEALTH & SAFETY	●	●	●	●	●																																	●	●	●	●	●	●	●	●	●	●	●	●								
	PROFIT MARGIN																																																										
	CASH FLOW																																																										
	PRODUCT LIABILITY							→ TOTAL RELATION																																																			
DESIGN FOR ASSEMBLY	ASSEMBLY METH.	●	●	●	●	●																																																				
	SHIPPING METH.	●	●	●	●	●																																																				
	ERECTION METH.	●	●	●	●	●																																																				
	COMMISSIONING	●	●	●	●	●		→ TOTAL RELATION																																																			

FLEXIBLE MANUFACTURING CELL/SYSTEM	
STAGE 1 – PRIMARY REQUIREMENTS	
TOP LEVEL CHART	

FLEXIBLE MANUFACTURING CELL/SYSTEM	○ WEAK
CHART 00	◒ MEDIUM
DATE:– 11/93	● STRONG

CHART 01

CHART 02

see back pocket

HOW

WHAT

Relationship

● Strong

◒ Medium

○ Weak

	WHAT	DESIGN FLOOR LAY-OUT	SECTION STIFFNESS	EVEN THERMAL DISTRIBUTION	DESIGN OF INCLINED SURFACES FOR CHIPS AND COOLANT COLLECTION	COOLANT TANK	COOLANT PUMP	X & Z T-SECTION	BOLT-ON GUIDEWAYS	FOUNDATION BEAMS	SPINDLE COOLING	Y AXIS DESIGN	SPINDLE BALANCING SYSTEM
	SAFETY GUARDING												
CHIPS & COOLANT	SLOPES												
CHIPS & COOLANT	COOLANT TEMPERATURE					●	●						
CHIPS & COOLANT	COOLANT NOT LEAKING OUT				●			●					
CHIPS & COOLANT	EASY CHIP EVACUATION	●			●	●	●	●					
X-Y-Z STRUCTURE	HIGH RIGIDITY		●					●	●	●			
X-Y-Z STRUCTURE	REDUCED THERMAL GROWTH			●	◒	○	○		◒		●		
X-Y-Z STRUCTURE	ONE PIECE X-Z							●					
X-Y-Z STRUCTURE	VIBRATIONS												
X-Y-Z STRUCTURE	MINIMUM FLOOR SPACE	●						●	●	◒			
X-Y-Z STRUCTURE	MINIMUM FOUNDATION REQ.	◒	●					●		●			
X-Y-Z STRUCTURE	EASY TO LEVEL DURING ERECTION		●					●		●			
X-Y-Z STRUCTURE	COLUMN Y-AXIS LOW FOR EASY TRANSPORT											●	●
X-Y-Z STRUCTURE	REPAIRABLE GUIDEWAYS												
	CAST IRON		●										
	STEEL WELDING		●										

FLEXIBLE MANUFACTURING CELL/SYSTEM
STAGE 1 – TERTIARY REQUIREMENTS
MACHINING CENTRE

FLEXIBLE MANUFACTURING CELL/SYSTEM	
CHART 03	
DATE:– 11/93	X-Y-Z STRUCTURE

○ WEAK

◒ MEDIUM

● STRONG

HOW

WHAT

Relationship

● Strong

◒ Medium

○ Weak

	STROKE X-AXIS	ELECTRICAL DESIGN	X-Z STRUCTURE DESIGN	TSF DESIGN
ACCEPTS FIXTURES IN EXCESS OF PALLET SIZE	●			
ALLOWS PALLET INDEXING DURING LOADING OPERATIONS	●			
ALLOWS MANUAL CONTROL FOR PREPARATION		●		
COLLECTS CHIPS AND COOLANT DRIPPING FROM FIXTURES			●	
CAN EASILY ACCEPT TRANSFORMATION FROM STAND ALONE TO FMC OPERATION				●
NOT TO BE DISMANTLED FOR SHIPPING			●	
IRREVOKABLE PALLET CLAMPING IN THE EVENT OF "SHUTDOWN"				●

FLEXIBLE MANUFACTURING CELL/SYSTEM
STAGE 1 – TERTIARY REQUIREMENTS
MACHINING CENTRE

FLEXIBLE MANUFACTURING CELL/SYSTEM		○ WEAK
CHART 04		◒ MEDIUM
DATE:– 11/93	PALLET EXCHANGER	● STRONG

HOW

WHAT

Relationship

- ● Strong
- ◒ Medium
- ○ Weak

	TOOL CHANGER DESIGN	MC DESIGN	ARM DIMENSIONING	POWER SOURCE		TOOL CHAIN DESIGN	MAKE OR BUY POLICY	ELECTRICAL CABINET	CNC PACKAGE	SOFTWARE
				ELECTRIC	HYDRAULIC					
MINIMUM FLOOR SPACE REQUIRED	◒	●								
FAST SWIVELLING ARM	●									
36+36 Kg PAYLOAD				●	●					
EXPANDABLE										
NOT CONNECTED WITH MC STRUCTURE	◒	●								
ALLOWS ACCESS FOR TOOL MAINTENANCE DURING MC OPERATIONS	●					●				
USES MARKET COMPONENTS							●			
TREATED BY THE CNC LIKE AN AXIS	●							●	●	●
ACCEPTS ADDITION OF TOOL HANDLING SYSTEM										
ALLOWS MANUAL OPERATION FOR SET-UP								●		●
SAME MOTOR AS X-YZ AXIS									●	

FLEXIBLE MANUFACTURING CELL/SYSTEM
STAGE 1 – TERTIARY REQUIREMENTS
MACHINING CENTRE

FLEXIBLE MANUFACTURING CELL/SYSTEM	
CHART 05	
DATE:– 11/93	TOOL CHANGER MAGAZINE

○ WEAK
◒ MEDIUM
● STRONG

WHAT \ HOW

Relationship
- ● Strong
- ◒ Medium
- ○ Weak

WHAT	BALLSCREW DESIGN	BALLSCREW QUALITY	DOUBLE PRE-COATED NUT	DEDICATED OIL POWER PACK	GUIDEWAY DESIGN	BALLSCREW SUPPORT	TELESCOPIC GUIDEWAYS COVERS	FEEDBACK MOUNTING AND WIRING DESIGN	PRESSURIZE OPTICAL SCALE	CNC PACKAGE SUPPLIERS	DESIGN OF OTHER ELEMENTS	STRUCTURE DESIGN	MAKE OR BUY POLICY		
GOOD WORKING SPEED	●	◒								●					
GOOD RAPID TRAVEL	●	◒								●					
FREE FROM VIBRATIONS	●	●	●		○	●	◒								
GOOD PRECISION	●	●	●		○	●	◒				●				
GOOd REPEATABLITY	●	●	●			●		●			●				
REVERSE MOTION FREE FROM BACKLASH	●	●	●					●		●					
LOW NOISE	●	●	●		●	●				●					
GUIDEWAY LUBRICATION CNC CONTROLLED AND FULLY MONITORED				●											
GUIDEWAYS AND BALLSCREWS WELL PROTECTED FROM CHIPS AND COOLANT					●							●			
MOTOR AND JOINT EASILY ACCESSIBLE FOR INSPECTION					●		●			●		●			
FEEDBACK LIMIT WELL PROTECTED FROM COOLANT CHIPS AND MIST					●			●	●	●	●	●			
FEEDBACK LIMIT REPLACEABLE IN SHORT TIME					●					●	●	●			
X-Y-Z AXIS FULLY INTERCHANGEABLE	●				●	●	●	●	●	●	●	●			
SAME MOTOR FOR "B" AXIS AND TOOL CHANGER MAGAZINE											◒				
READY-MADE GUIDEWAYS													●		

FLEXIBLE MANUFACTURING CELL/SYSTEM		○ WEAK
CHART 06		◒ MEDIUM
DATE:- 11/93	X-Y-Z AXIS	● STRONG

FLEXIBLE MANUFACTURING CELL/SYSTEM
STAGE 1 - TERTIARY REQUIREMENTS
MACHINING CENTRE

WHAT \ HOW

Relationship
- ● Strong
- ◒ Medium
- ○ Weak

WHAT	MOTOR SIZE	TRANSMISSION DESIGN	SPINDLE DESIGN	SPINDLE CARTRIDGE DESIGN	BEARING SELECTION	CNC FUNCTION SUPPLIER	Y-AXIS SADDLE DESIGN	SAFETY CONSIDERATION	DESIGN	DEDICATED POWER PACK	COMPLETE HEAT EXCHANGER
GOOD POWER RANGE	●										
GOOD RPM	●	●	●		●						
NO GEARS		●	●				●				
NO CLUTCHES		●	●				●				
COOLANT THROUGH SPINDLE				●			●				
COLLISION SAFETY PIN			●		●						
LUBRICATION FOR LIFE (BEARINGS)											
SPINDLE COOLING CIRCUIT										●	
AUTOMATIC SPINDLE ORIENTATION						●					
MULTI-TOOTHED BELT POWER TRANSMISSION		●					●				
EASY BELT TENSION CONTROL			●				●				
POSSIBILITY OF ADDING A READY MODE											
GEAR BOX AS OPTIONAL							●				
CLAMPING BUSH FOR TOOL HOLDER			●				●				
STUD EASILY REPLACEABLE											
TOOL HOLDER CLAMP IRREVERSIBLE IN THE EVENT OF SHUTDOWN								●	●		
PRECISION		●	●	●	●		●				
CONTAINED AND EVEN THERMAL EXPANSION		●	●	●	●					●	●

FLEXIBLE MANUFACTURING CELL/SYSTEM	○ WEAK
CHART 07	◒ MEDIUM
DATE:- 11/93 | DESIGN OF SPINDLE	● STRONG

FLEXIBLE MANUFACTURING CELL/SYSTEM
STAGE 1 – TERTIARY REQUIREMENTS
MACHINING CENTRE

HOW

WHAT

Relationship

● Strong

◒ Medium

○ Weak

AEC	WIRING DESIGN	DESIGN COMPONENTS LAYOUT	USE OF STD RACK	COMPLIANCE WITH H & S REGULATIONS	CLAMPING EYES FOR SHIPPING	MODEM PLUG FOR CNC	REMOTE DIAGNOSIS	CUSTOMER TECH. SPEC.	CNC SUPPLIER	CABINET SUPPLIER
SMALL DIMENSIONS		●	●	●				●	●	
HEAT SOURCES PROPERLY LOCATED TO DISSIPATE HEAT		●		●					●	
SEPARATE POWER AND ELECTRONIC CIRCUITS		●		●				●	●	
SAFETY INTERLOCK BETWEEN BETWEEN SECTIONS	●									
DEDICATED AND ERGONOMICALLY DESIGNED FRONT PANEL		●		●				●	●	
NON-REVERSIBLE CABLE CONNECTORS	●	●								
USE OF STANDARD ELECTRICAL CABINET		●		●	●			●	●	
UNIT SEALED SEALED, AIR CONDITIONED AND CNC CONTROLLED									●	●

FLEXIBLE MANUFACTURING CELL/SYSTEM
STAGE 1 – TERTIARY REQUIREMENTS
MACHINING CENTRE

FLEXIBLE MANUFACTURING CELL/SYSTEM	
CHART 08	
DATE:– 11/93	ELECTRICAL CABINET

○ WEAK

◒ MEDIUM

● STRONG

HOW

WHAT

Relationship

● Strong

◒ Medium

○ Weak

	SUMP DESIGN	VARIABLE DISPLACEMENT PUMP	GEAR PUMP	FILTRATION UNIT CHOICE	MC LAYOUT	QUALITY PUMPS	SIZE OF TANK TO AVOID CAVITATION PROBLEMS	MC ENCLOSURE	CIRCUIT DESIGN	FMC LAYOUT	
ACC											80ℓ/½ bars
HIGH VOLUME DELIVERY	◒	●					●				20/30ℓ/¾ bars
HIGH PRESSURE DELIVERY			●			●			●		
GOOD FILTRATION				●							
GOOD VOLUME TANK	●				●						
GOOD ACCESS FOR COOLANT CONTROL AND REPLACEMENT	●				●			●		●	
LOW NOISE	●	●	●	●			●	●	●		
EASY MAINTENANCE	●				●					●	
ADJUSTABLE JETS TO SUIT PART IN MANUFACTURING								●	●		

FLEXIBLE MANUFACTURING CELL/SYSTEM
STAGE 1 – TERTIARY REQUIREMENTS
MACHINING CENTRE

FLEXIBLE MANUFACTURING CELL/SYSTEM		○ WEAK
CHART 09		◒ MEDIUM
DATE:– 11/93	COOLANT CIRCUIT	● STRONG

HOW

WHAT

Relationship

● Strong

◒ Medium

○ Weak

	STRUCTURE DESIGN FOR:									
	FIXED MOD	MOBILE SHUTTLE	PALLET DEPOSIT	STIFFNESS DESIGN	MOTOR CHOICE	TRANSMISSION BOX	CNC PACKAGE SUPPLIER	ELECTRIC DESIGN	SOFTWARE DESIGN	MAKE OR BUY POLICY
LIMITED FLOOR SPACE	●	●	●							
DO NOT REQUIRE FOUNDATION				●						
MODULAR	●	●	●					●	●	
EXPANDABLE	●	●	●					●	●	
DO NOT CREATE FLOOR OBSTACLE	●	●	●					●		
CAPABLE OF ALLOWING TRANSPORT TO PALLET FIXTURES AND PARTS WITH HIGH SPEED	●	●	●	●	●	●	●	●		
LOW COST	●	●	●				●	●		●
MAXIMUM RELIABILITY	●	●	●				●	●	●	
COMPLYING WITH H & S	●	●	●							
EASY TO SHIP	●	●	●							
EASY TO INSTALL	●	●	●					●		
LIMITED MAINTENANCE REQUIREMENT	●	●	●				●	●		
IDENTIFIES PALLET AND MISSION										
ACKNOWLEDGES CELL CONTROLLER ORDERS AND CONFIRMS EXECUTION							●	●	●	
CARRIES ON BOARD MOTOR, DRIVE AND ELECTRONIC INTERFACE TO CELL CONTROLLER		●					●	●	●	
USES READY MADE GUIDEWAYS	●	●	◒							●
THE SHUTTLE IS TREATED AS A MACHINE TOOL AXIS AND QUALIFIES ITS POSITION AT THE START UP							●	●		
RELIABILITY OR MTBF COMPARABLE TO A CNC AXIS							●	●		
ATTACHABLE TO ALREADY EXISTING MC	●	●	●					●	●	
EASY ALIGNMENT WITH MC AND LOADING/UNLOADING STATION	●	●		●						

70 m/min,
1500 kg PALLET

FLEXIBLE MANUFACTURING CELL/SYSTEM	○ WEAK
CHART 10	◒ MEDIUM
DATE:– 11/93 | SHUTTLE STRUCTURE	● STRONG

FLEXIBLE MANUFACTURING CELL/SYSTEM
STAGE 1 – TERTIARY REQUIREMENTS
PALLET SHUTTLE SYSTEM

HOW

WHAT

Relationship

● Strong

◒ Medium

○ Weak

	STRUCTURE DESIGN	MAKE OR BUY POLICY	ELECTRICAL DESIGN	COMPLIANCE WITH HEALTH & SAFETY REGULATIONS	SOFTWARE DESIGN
LOW COST	●	●			
ERGONOMICALLY DESIGNED	●				
PALLET INDEX FOR EASY OPERATION	●		◒		
IRREVERSIBLE PALLET LOCK IN EVENT OF SHUTDOWN	●		◒	◒	
COLLECTS RESIDUAL CHIPS AND COOLANT	●				
IDENTIFIES PALLET CODES			◒		●
DO NOT REQUIRE FOUNDATIONS	●				
EASY TO LEVEL AND COMMISSION	●				
EASY TO SHIP	●		◒		
EASY ALIGNMENTS WITH OTHER UNITS (LINE MODULE)	●				

FLEXIBLE MANUFACTURING CELL/SYSTEM
STAGE 1 – TERTIARY REQUIREMENTS
SHUTTLE SYSTEM PALLET TRANSPORT

FLEXIBLE MANUFACTURING CELL/SYSTEM		○ WEAK
CHART 11		◒ MEDIUM
DATE:– 11/93	LOADING/UNLOADING STATION	● STRONG

WHAT \ HOW

Relationship
- ● Strong
- ◒ Medium
- ○ Weak

	MC DESIGN	ELECTRICAL DESIGN	PALLET EXCHANGER DESIGN	SOFTWARE DESIGN	CNC PACKAGE SUPPLIER	STRUCTURE DESIGN	STIFFNESS	HEALTH &SAFETY DESIGN	SHUTTLE DESIGN
POSSIBILITY TO RETRO-FIT ON EXISTING MC	●	●	●						
CONNECTS EASILY TO CELL CONTROLLER		●		●					
OPERATES THE ASSIGNED MISSIONS LIKE A MACHINE TOOL AXIS		●	●	●	●				
TRAVEL AT HIGH SPEED BUT HAS CAPACITY TO CALCULATE DECELERATION RAMP AND STOP WITH PRECISION				●	●	●			
MODULAR SO AS TO ALLOW FMC EXPANSION AT AFFORDABABLE COST		●	●	●	●	●			
DOES NOT CREATE OR REQUIRE FLOOR MODIFICATIONS						●	●		
IN THE EVENT OF BREAKDOWN ALLOWS POSSIBILITY TO WORK ON STAND ALONE MODE WITH THE MC	●			●	●	●		●	
FOR IMPORTANT FMS INSTALLATION A SECOND SHUTTLE CAN BE USED AS A SPARE MINIMISING FMC/FMS DOWN TIME						●		●	●
COULD ALLOW TWO SHUTTLES TO OPERATE ALONG SAME LINE		●		●	●	●	●	●	

FLEXIBLE MANUFACTURING CELL/SYSTEM	○ WEAK
CHART 12	◒ MEDIUM
DATE:– 11/93 | SHUTTLE INTEGRATION	● STRONG

FLEXIBLE MANUFACTURING CELL/SYSTEM
STAGE 1 – TERTIARY REQUIREMENTS
PALLET SHUTTLE SYSTEM

HOW

WHAT

Relationship

● Strong

◒ Medium

○ Weak

WHAT	ELECTRICAL DESIGN	MC ALIGNMENT	SOFTWARE DESIGN	SAFE DESIGN COMPLIANCE	HEALTH & SAFETY REGULATIONS	CARRIAGE DESIGN	MAKE OR BUY POLICY	CNC PACKAGE SUPPLIER	CLAMPING ARM DESIGN	
ACCOMPLISH MISSION FROM TOOLROOM TO MC	●	●	●							
HIGH SPEED				●	●					50 m/min, 36 kg PALLET
DO NOT CREATE HAZARD FOR OPERATORS				●	●					
EASY ASSEMBLY						●				
USE OF COMMERCIAL PARTS										
ELECTRICALLY OPERATED CLAMPING						●				
TREATED LIKE A CNC AXIS			●					●		
CARRIES ON BOARD MOTOR, DRIVE AND CELL CONTROLLER INTERFACE	●					●		●		
CALCULATE DECELERATION RAMP, AIMING TO MAXIMISE TIME SAVING			●					●		
POWERED ELECTRICALLY	●		●	●		●		●		
IRREVERSIBLE TOOL CLAMPING IN THE EVENT OF FMC SHUTDOWN	●								●	

FLEXIBLE MANUFACTURING CELL/SYSTEM
STAGE 1 – TERTIARY REQUIREMENTS
TOOL HANDLING SYSTEM

FLEXIBLE MANUFACTURING CELL/SYSTEM		○ WEAK ◒ MEDIUM ● STRONG
CHART 13		
DATE:– 11/93	CARRIAGE AND TOOL CLAMPING ARM	

HOW

WHAT

Relationship

- ● Strong
- ◒ Medium
- ○ Weak

	PART DESIGN	TOOL CHANGER DESIGN	MAKE OR BUY POLICY	SPECIFICATIONS TO PURCHASE DEP'T	COMPLIANCE WITH HEALTH & SAFETY REGULATIONS
LINKS TOOLROOM TO ALL MC	●	●			◒
RIGIDITY	●			◒	
CAN BE RETROFITTED IN EVENT OF FMC EXPANSION	●				
USES COMMERCIAL STEEL BEAM SECTION	●		●	◒	
USES COMMERCIAL HARDENED GUIDEWAYS AND RACK AND PINION	●		●	◒	
ALLOWS PRECISE MOTION OF CARRIAGE	●			◒	
EASY TO ASSEMBLE					
COMPLETE WITH SAFETY GRATINGS	●				●

FLEXIBLE MANUFACTURING CELL/SYSTEM
STAGE 1 – TERTIARY REQUIREMENTS
TOOL HANDLING SYSTEM

FLEXIBLE MANUFACTURING CELL/SYSTEM		○ WEAK
CHART 14		◒ MEDIUM
DATE:– 11/93	MODULAR GANTRY GUIDEWAYS	● STRONG

WHAT \ HOW

Relationship
- ● Strong
- ◒ Medium
- ○ Weak

WHAT \ HOW	TOOL MAGAZINE DESIGN	MC LAYOUT	MAKE OR BUY POLICY	SWIVELLING ARM DESIGN	ELECTRICAL DESIGN	SOFTWARE DESIGN	CNC PACKAGE SUPPLIER	CELL CONTROLLER	LINE PRE-SETTING	MC TOOL CODE READER	TOOLROOM LAYOUT	EASY SERVICE-FAST DEBUG
MINIMUM FLOOR SPACE REQUIREMENT	●	◒										
MINIMUM DISTANCE FROM MC	●	●	●									
EASY LOADING/UNLOADING FOR TOOLROOM OPERATORS (AUTOMATED CYCLES ON TOOL LISTS)				●	●	●						
EXPANDABLE AT REASONABLE COST	●	●	●		●	◒						
COMMON MC TOOL CHAIN	●		◒		◒	◒	◒					
EACH TOOL MAGAZINE TO BE TREATED LIKE A CNC AXIS	●				●	●	●					
LINKED WITH CELL CONTROLLER REAL-TIME READING OF TOOLROOM MAP						●		●				
KEEP TRACK OF TOOL DATA						●	●	●	●	●		
READS PALLET CODES ASSOCIATED WITH TOOL LIST					●	●	●	●		●		
HIGH RELIABILITY	◒				●	●	●	●	●	●		
CAN ALLOW MANUAL OPERATION OF EACH TOOL MAGAZINE	●										●	
USES COMMERCIAL PARTS					●	●	●					●

FLEXIBLE MANUFACTURING CELL/SYSTEM	○ WEAK
CHART 15	◒ MEDIUM
DATE:- 11/93 TOOLROOM INTEGRATION	● STRONG

FLEXIBLE MANUFACTURING CELL/SYSTEM
STAGE 1 – TERTIARY REQUIREMENTS
TOOLROOM LAYOUT

REPRODUCED PICTURES

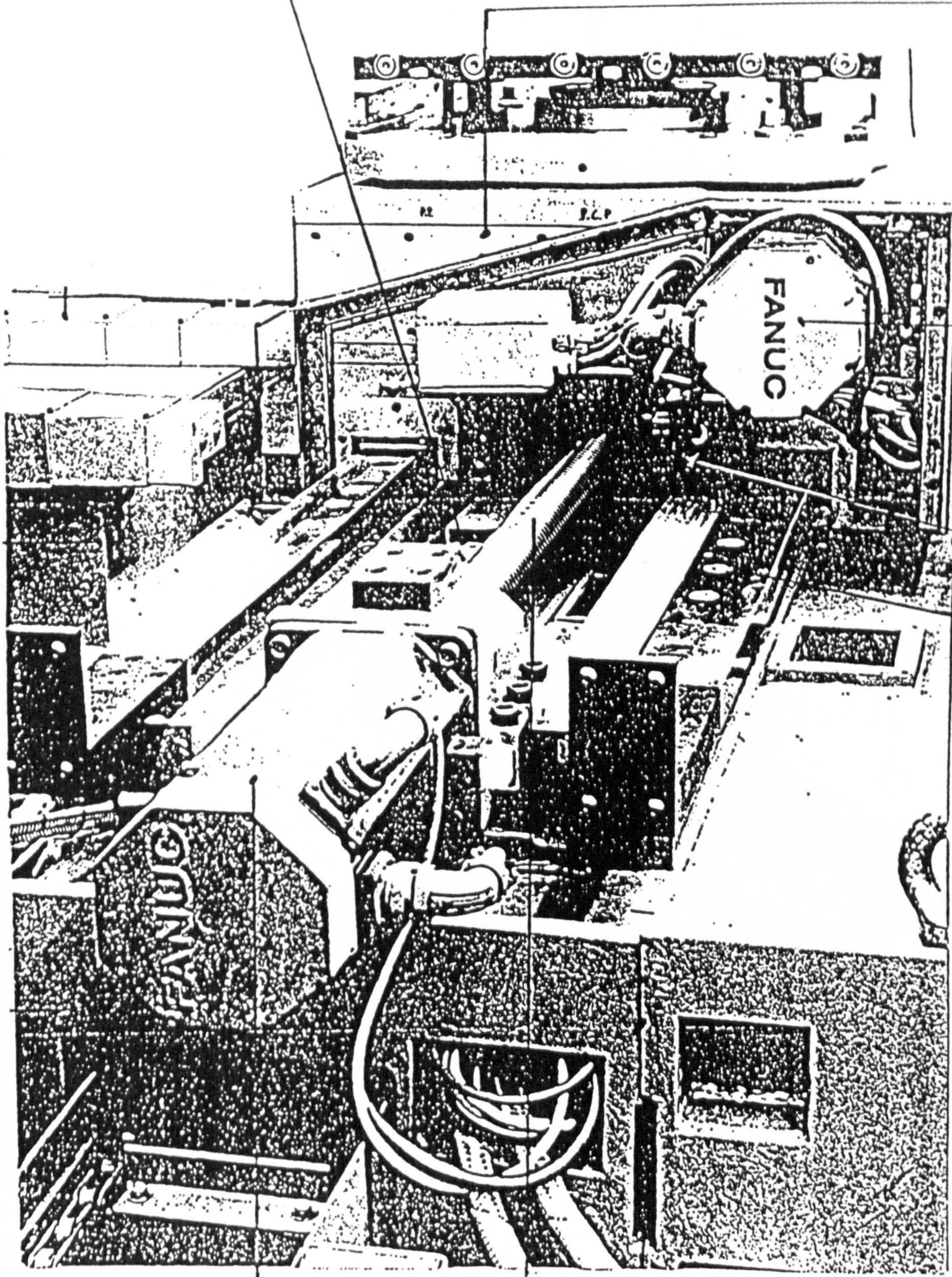

PICTURE N. 001

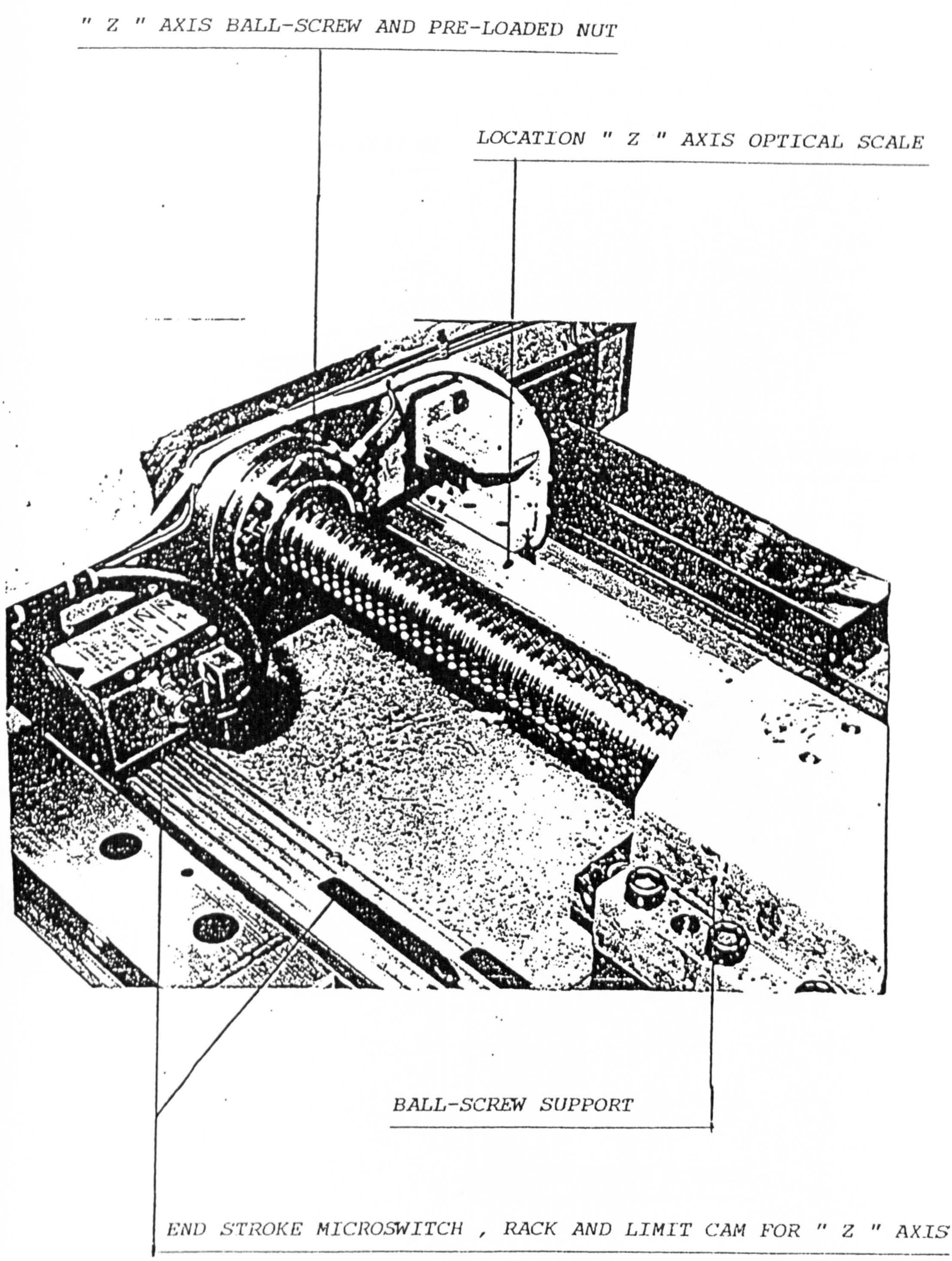

PICTURE N. 002

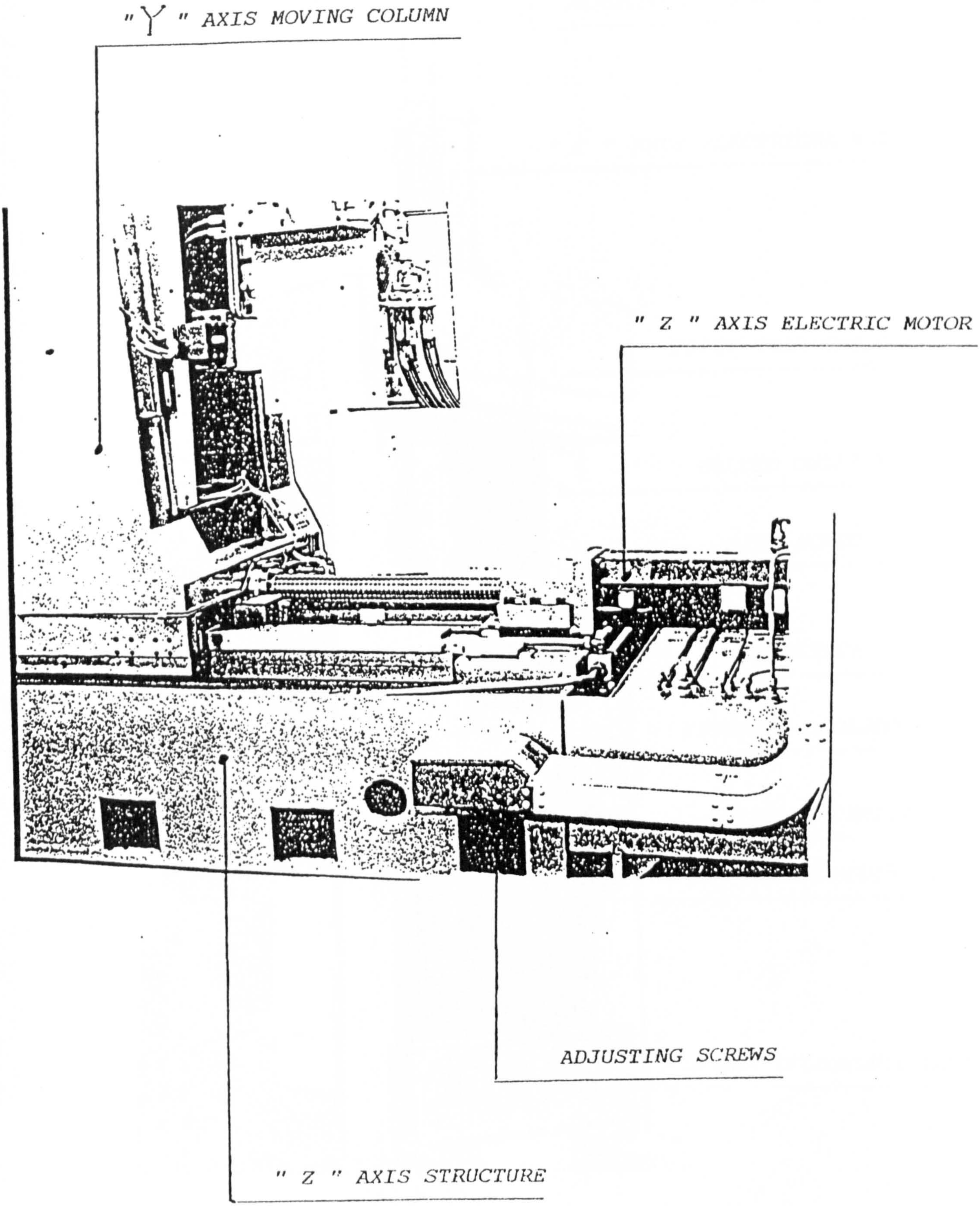

PICTURE N. 003

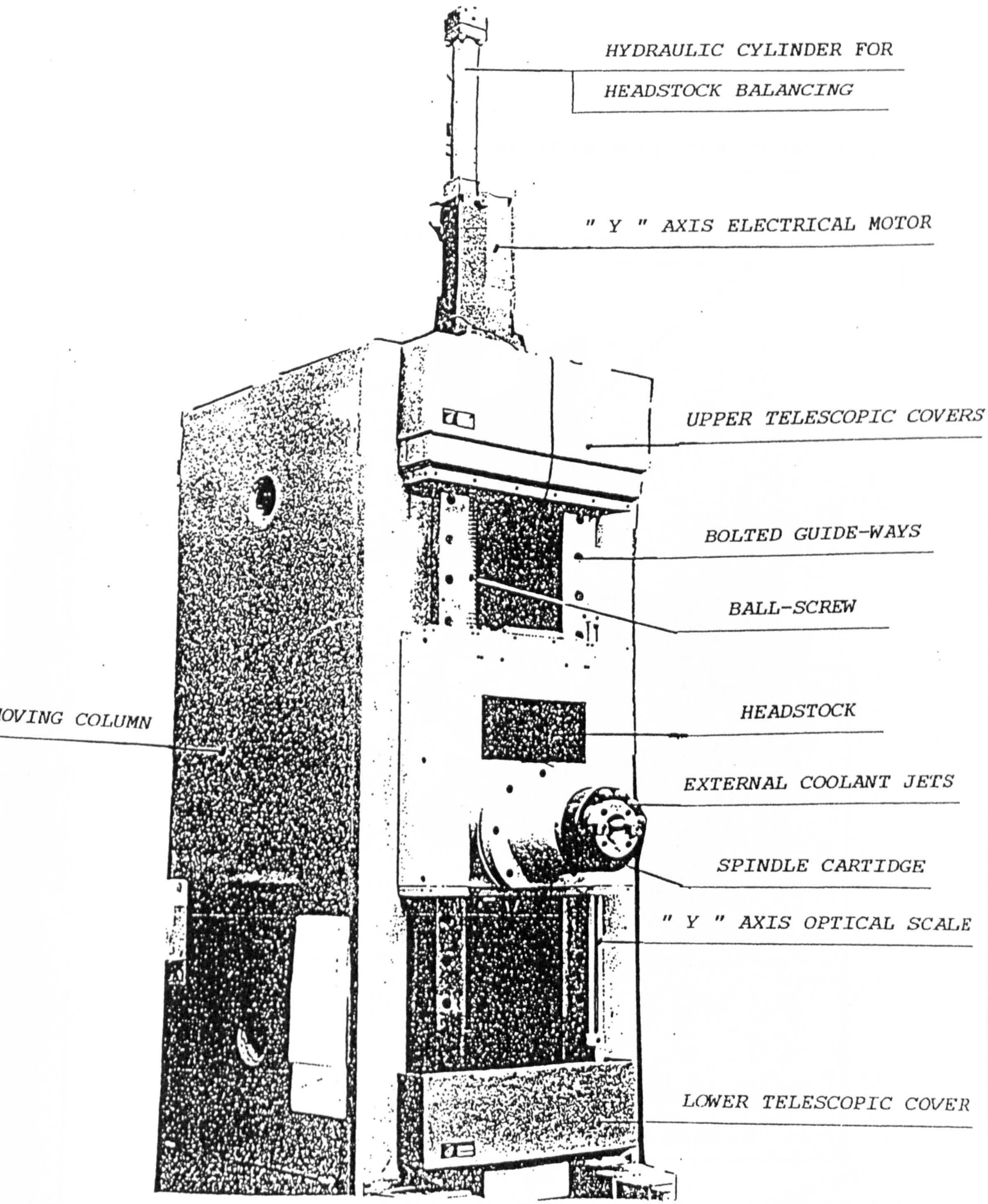

PICTURE N. 004

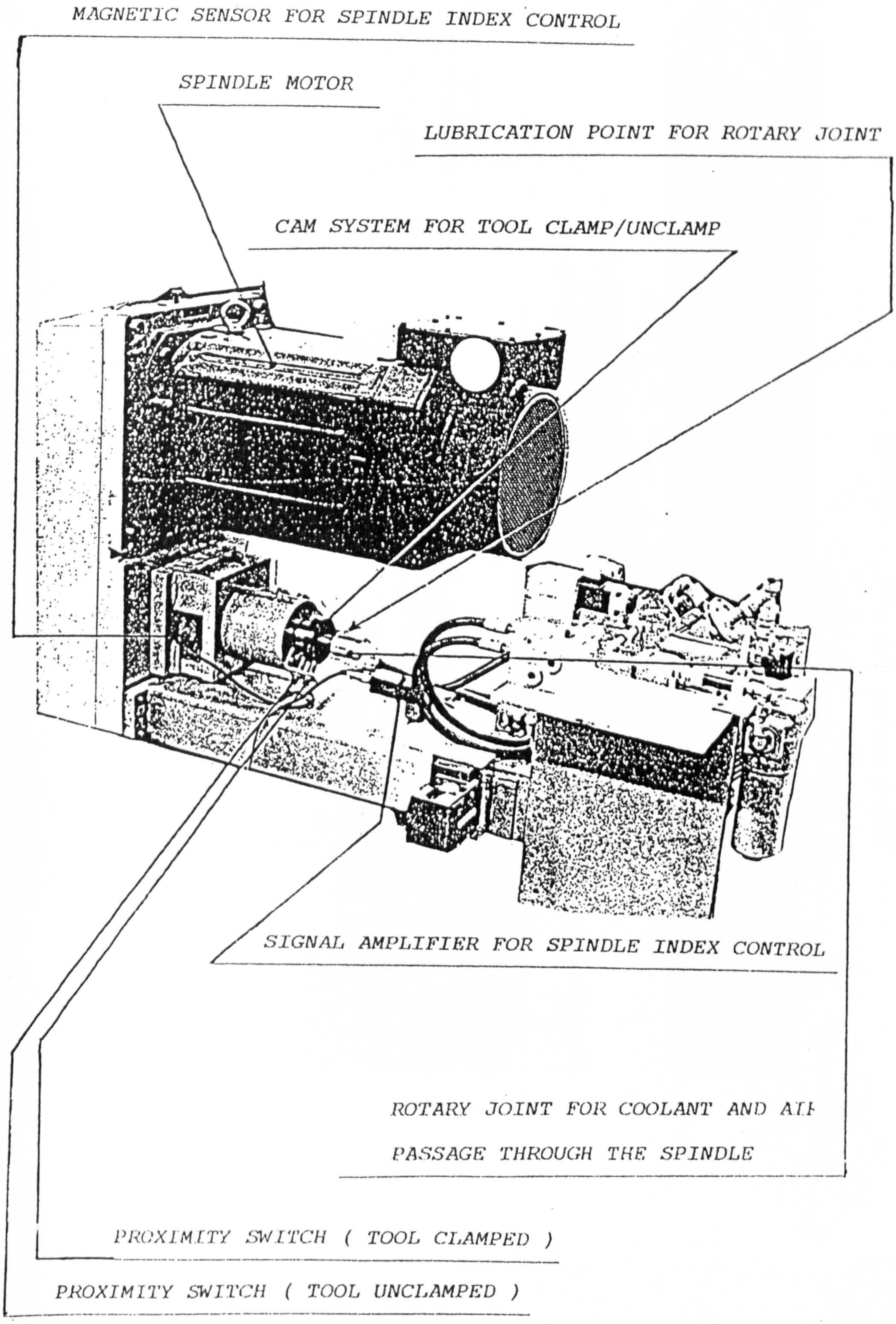

PICTURE N.005

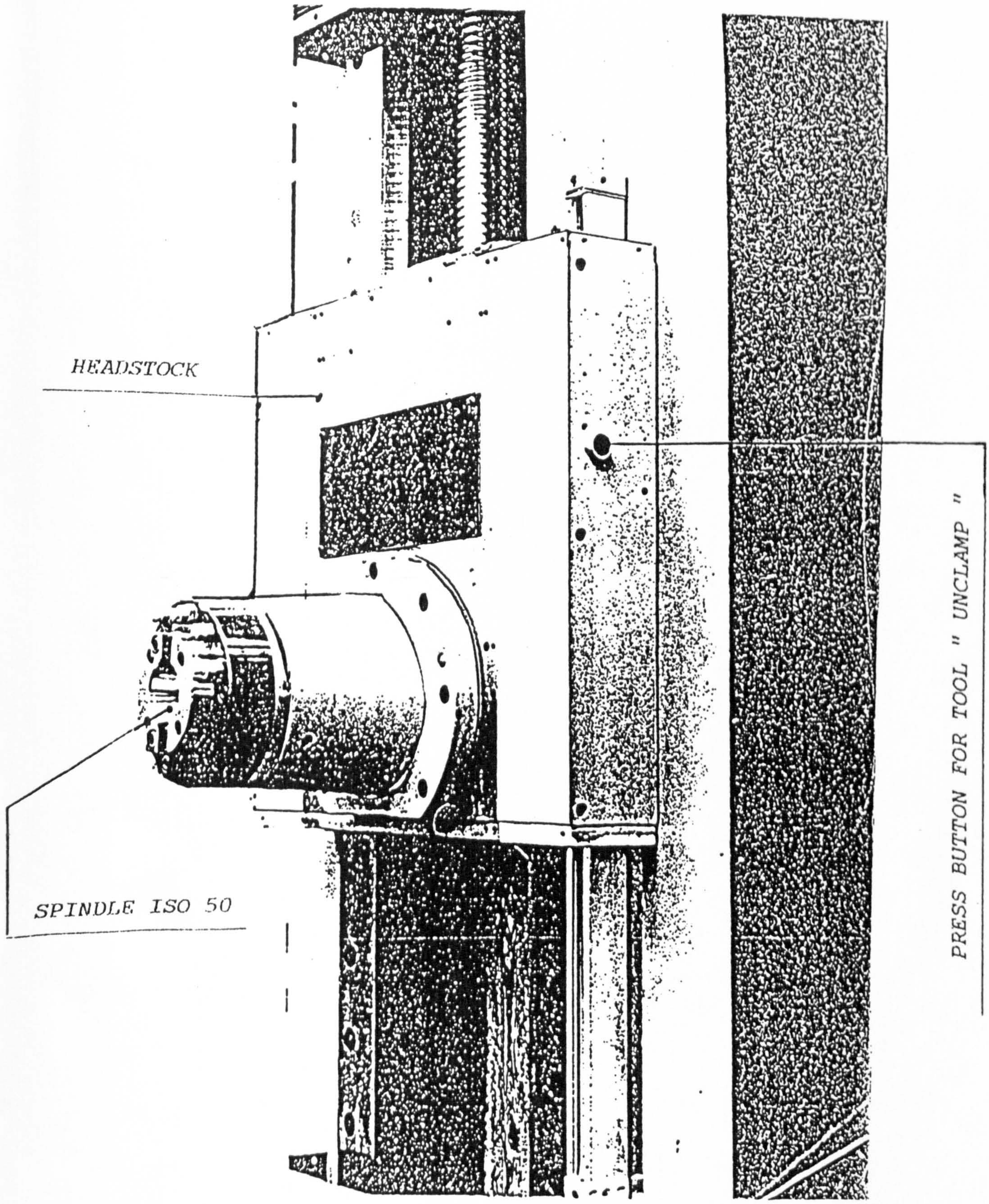

PICTURE N.006